GALASSI&ORTOLANI

VALVESMANUFACTUREDIVISION

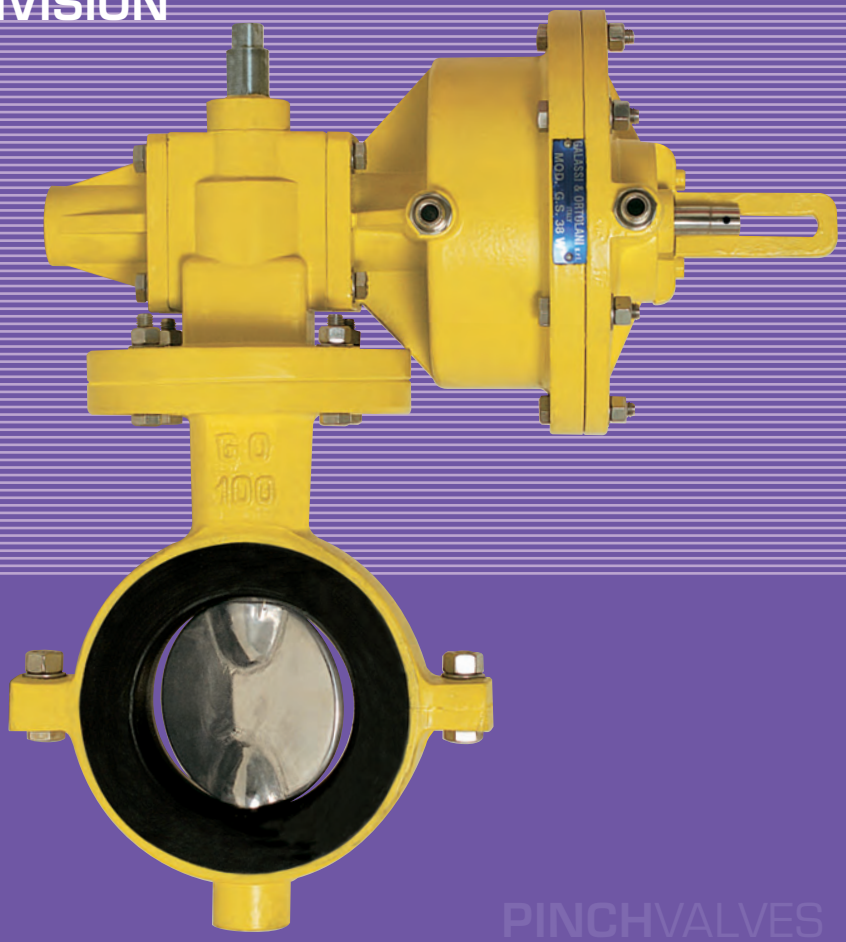

PINCHVALVES

BUTTERFLYVALVES

DIAPHRAGMVALVES

CHECKVALVES

BALLVALVES

GATEVALVES

THERMOPLASTICVALVES

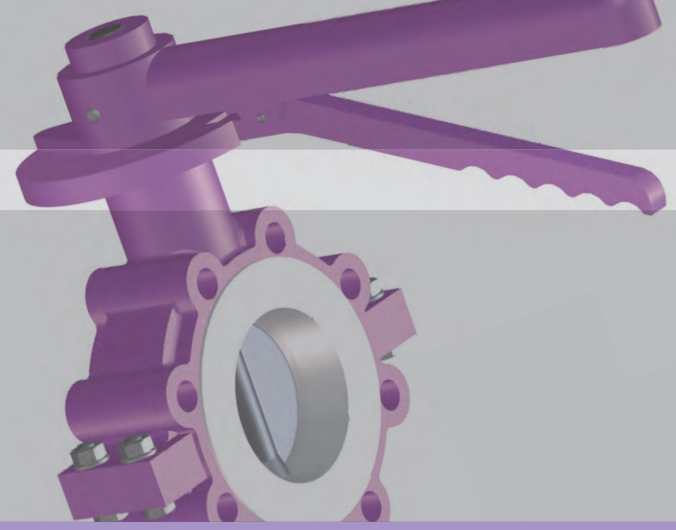

BUTTE

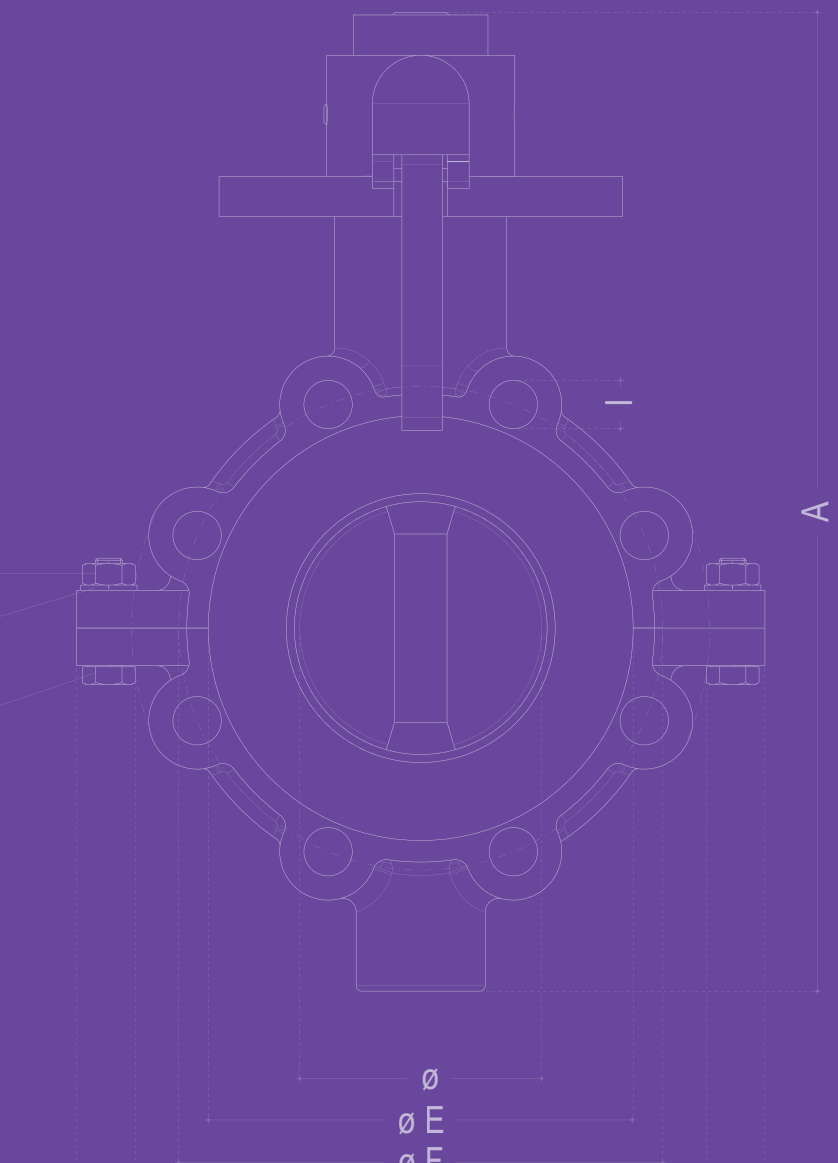

RFLY VALVES

THE ANSWER TO PROBLEMS OF: CORROSION, ABRASION, CLOGGING, CONTAMINATION, VACUUM & GAS HANDLING

Hand and pneumatic operated butterfly valves are quick opening valves that consist of a metal disc (lined where necessary) with its pivot axes at right angles to the direction of flow in the pipe.
They are leaktight on all liquids, slurries, granular materials, powders, pastes, gases acids etc...
Seat and disc are easily replaceable without any special tools.
The wide range of available elastomer materials enables an appropriate selection for each application and is a guarantee of perfect resistance to corrosion and abrasion.

PRODUCT FEATURES

- To mount between flanges ANSI/BS/DIN/JIS
- Size from 2" through 24"
- Manual, pneumatic and electric operated

PERFORMANCE FEATURES

*RESILIENT SEATED CONCEPT
- Lower risk of damage due to tuberculation then metal on metal concept valve
- Long seat life: no metallic inserts to strain the elastomers
- Body valve designed and manufactured in one or two parts
- Special two parts body valve for quick and easy replacement of seat and disc
- No maintenance
- Long durability
- Epoxy painted, valve bodies protected with an anti-acid varnish

*METAL ON METAL CONCEPT
- Metal seated valve for high temperature
- Body valve designed and manufactured in one part
- PTFE seated valve only available for temperature up to 200°

BODY VALVE MATERIALS

-- Spheroidal cast iron GS400
- Aluminium
- A216WCB carbon steel
- SS 304; SS 316; SS 316 L
- PVDF, PPH

DISC MATERIALS

- Hard rubber lined A216 WCB carbon steel
- PFA lined
- Rilsan lined
- HALAR/ECTFE lined 304 or 316 or marine 316 Stainless steel
- SS 304; SS 316; SS 316 L
- Ductile iron
- Hastelloy C
- Aluminium bronze
- Duplex
- PVDF, PPH

MATERIAL OF SEAT

- Natural rubber
- White natural rubber
- Neoprene
- EPDM
- Viton
- Butyl
- Nitrile
- Hypalon
- Silicone
- Neoprene/Silicone (mixed)
- PTFE

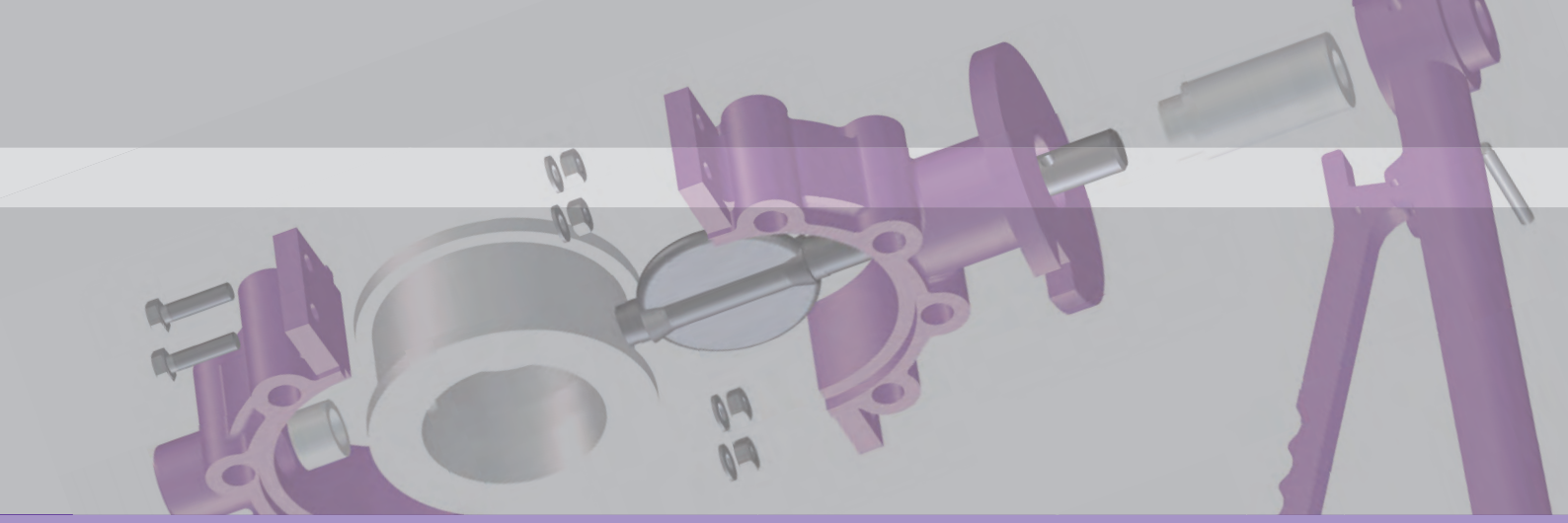

DESIGN/DIMENSIONS APPLICABLE STANDARD

- ISO 5752

CERTIFICATES AVAILABLE

- EN 10204 3.1.B
- EN 10204 2.2
- GHOST-R

INSPECTION TESTS AVAILABLE BY

- SGS GLOBAL TRADE SOLUTIONS
- ITS INTERTEK TESTING SERVICES
- BV BUREAU VERITAS

MAJOR MARKETS SERVED

- Chemical process
- Power generation
- Water treatment
- Mining
- Pulp & Paper
- Nuclear
- Pharmaceutical
- Food & Beverage
- Sugar
- Oil process

OPTIONS

- Limit switches
- Solenoid valve
- Position indicator
- Air filter regulator
- 3:15 PSI positioner
- 4:20mA electropneumatic positioner or 4:20mA electronic transmitter of position 30°-90°angle
- Mono/Triphase AC motor (240V/50Hz through 400V/50Hz)

G&O SERIES PNEUMATIC ACTUATORS

Piston type air operators line offer a great solution to a wide range of actuation situations. They are exclusively designed to G&O series butterfly valves and can be mounted in any position. These actuators are builted in aluminium and are available in three options:

- single effect acting - fail to close (air to open)
- single effect acting - fail to open (air to close)
- double effect acting – fail to open & fail to close

Single effect acting actuators are fitted by an extractable handwheel for security.

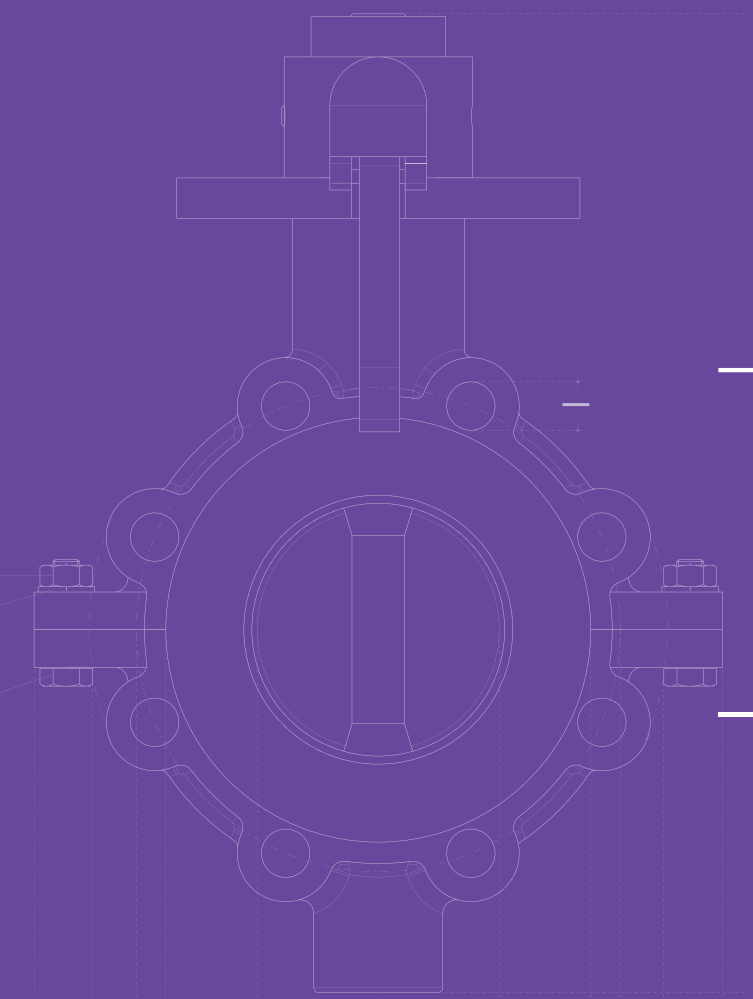

Model GS33 DSB

BUTTERFLY VALVES

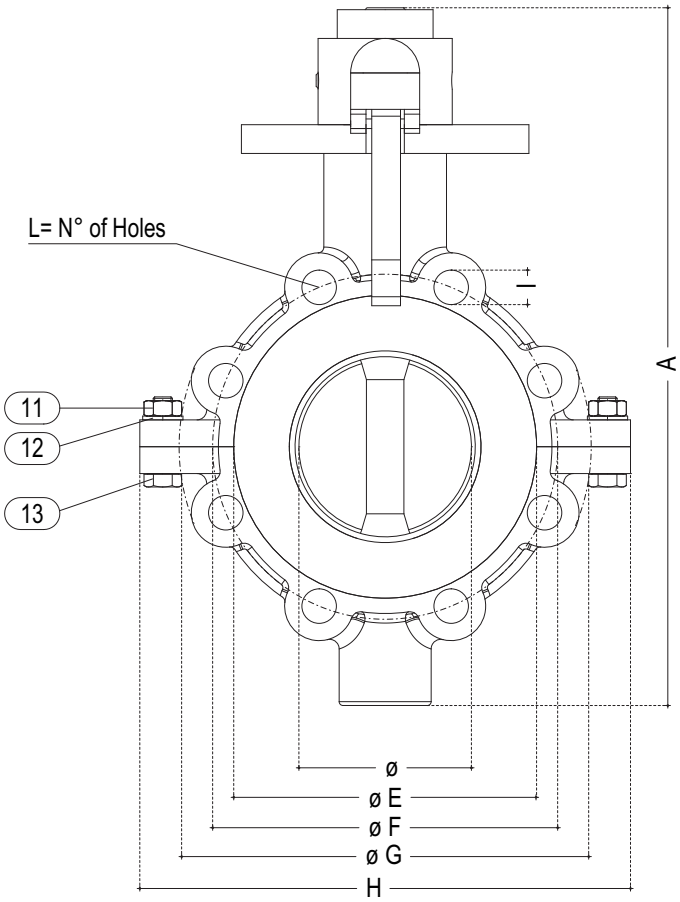

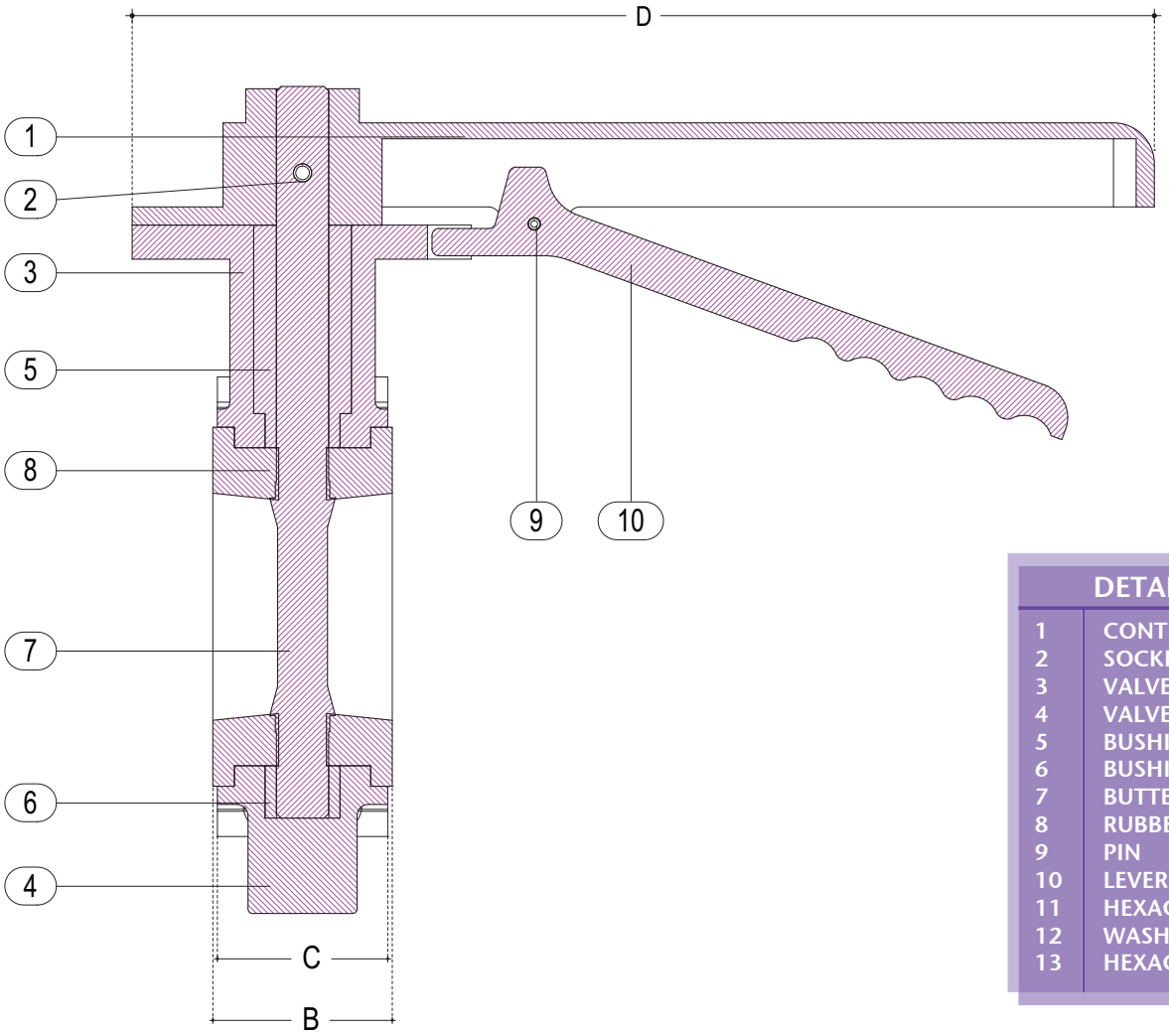

DETAILS	
1	CONTROL LEVER
2	SOCKET
3	VALVE UPPER BODY
4	VALVE LOWER BODY
5	BUSHING
6	BUSHING
7	BUTTERFLY
8	RUBBER SLEEVE
9	PIN
10	LEVER
11	HEXAGON NUT
12	WASHER
13	HEXAGON BOLT

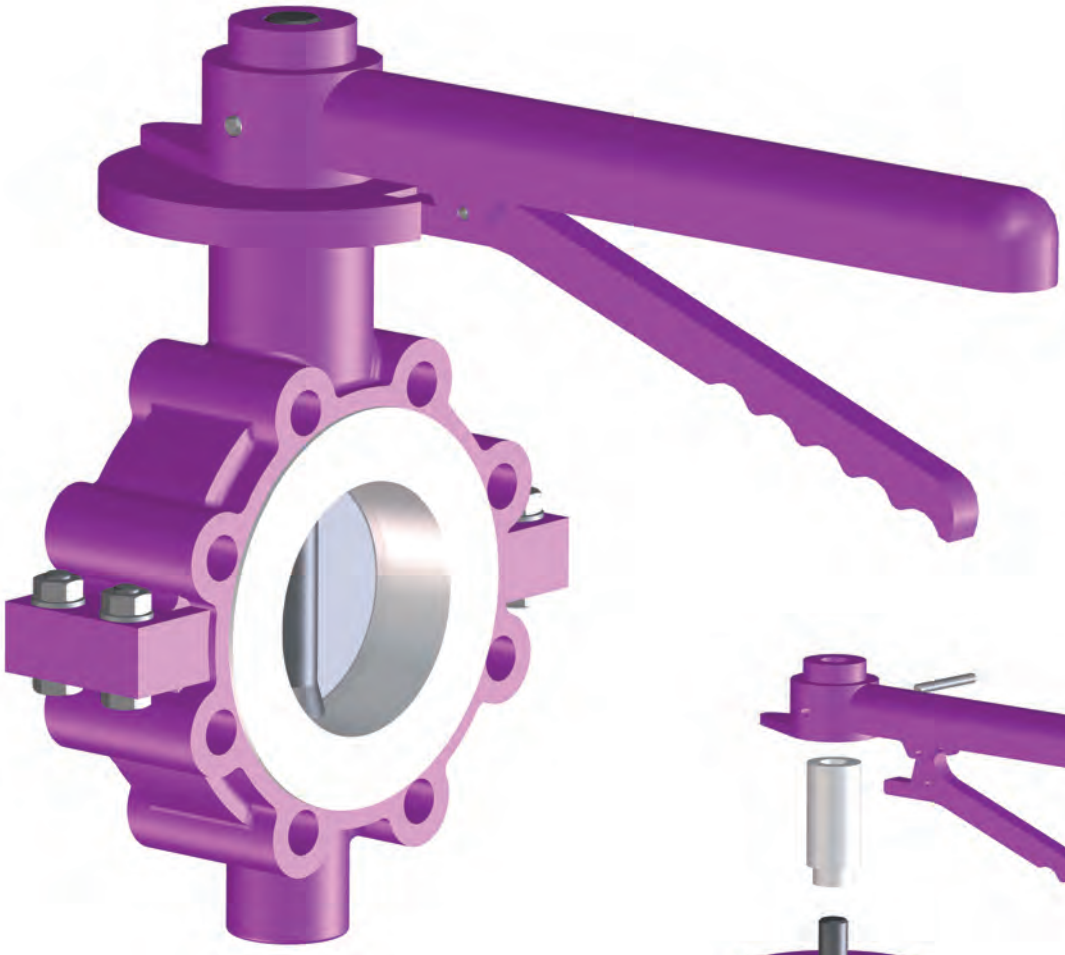

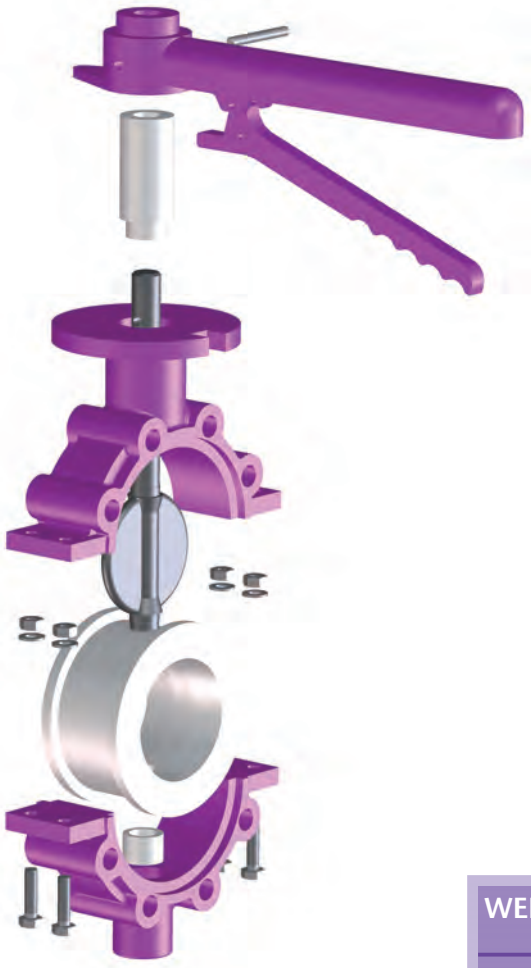

WEIGHT KG C.I.
30,000
36,000
52,000
60,000
72,000

PRESSURE DETAILS UNI_1284

DN	P.N.	HYDRAULIC TEST kg/cm² OPEN	HYDRAULIC TEST kg/cm² CLOSE	WORKING PRESSURE kg/cm²
100	4	10	4	3,5
150	4	10	4	3,5
200	4	10	4	3,5
250	4	10	3,5	3
300	4	10	3,5	3

NOTE: For different pressure details please ask the DPT

DIMENSIONS

Ø	A	B	C	D	E	F	G	H	I	L
100	375	78	72	450	160	180	220	280	18	8
150	450	88	84	470	210	240	285	355	22	8
200	505	95	90	500	260	295	340	420	22	8
250	565	100	98	500	310	350	405	485	22	12
300	615	110	105	500	360	400	450	530	22	12

Model GS33W DSB

BUTTERFLY VALVES

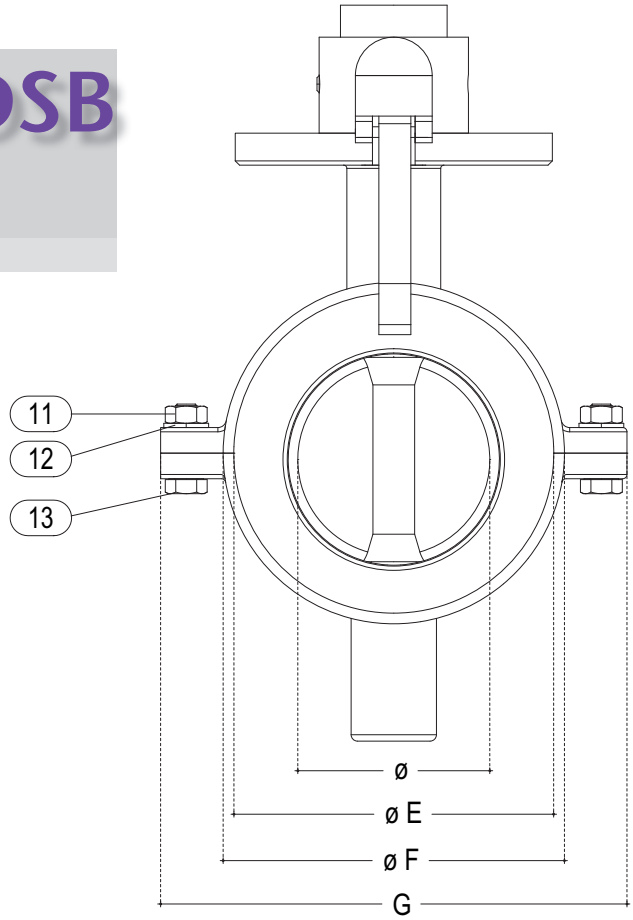

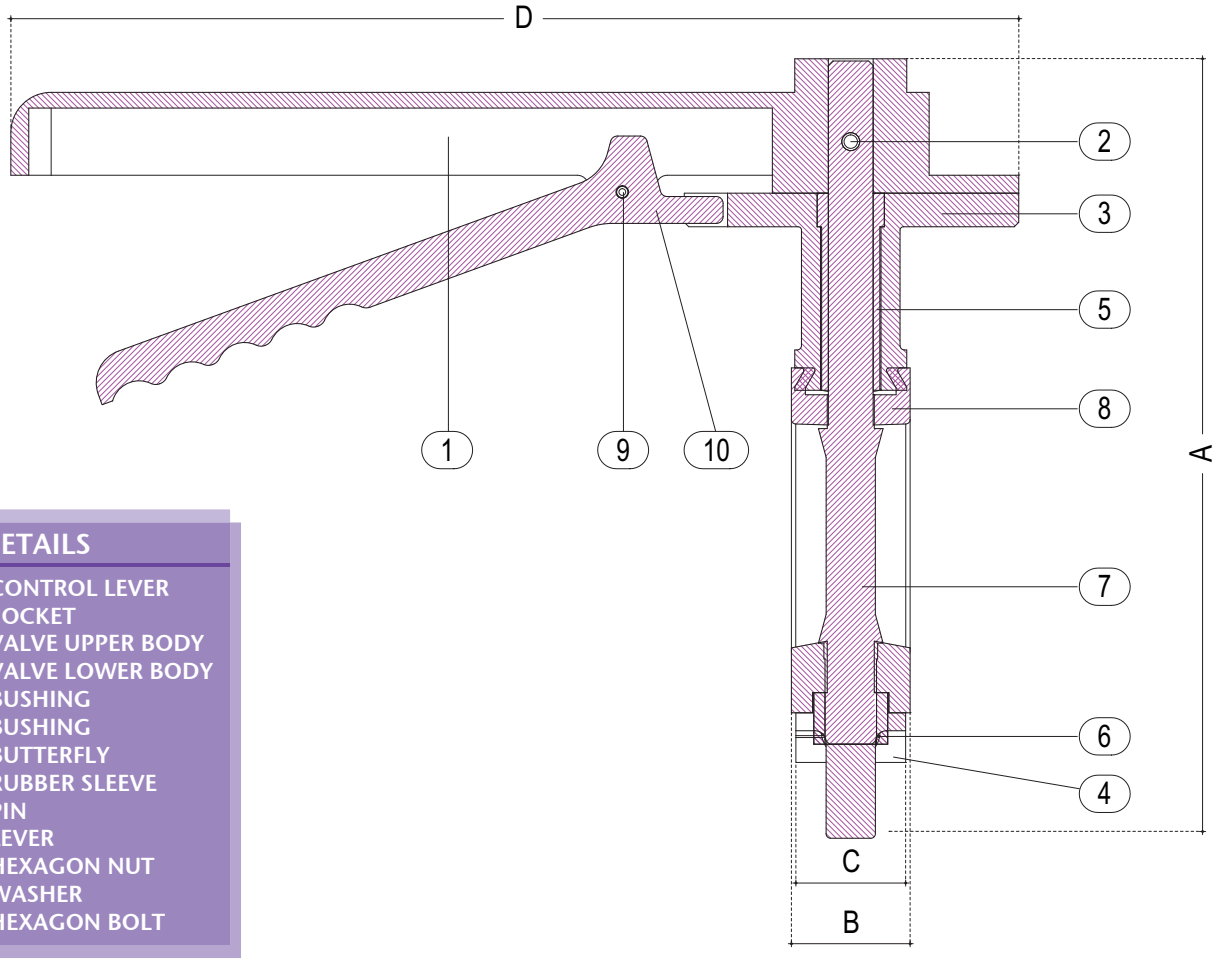

DETAILS	
1	CONTROL LEVER
2	SOCKET
3	VALVE UPPER BODY
4	VALVE LOWER BODY
5	BUSHING
6	BUSHING
7	BUTTERFLY
8	RUBBER SLEEVE
9	PIN
10	LEVER
11	HEXAGON NUT
12	WASHER
13	HEXAGON BOLT

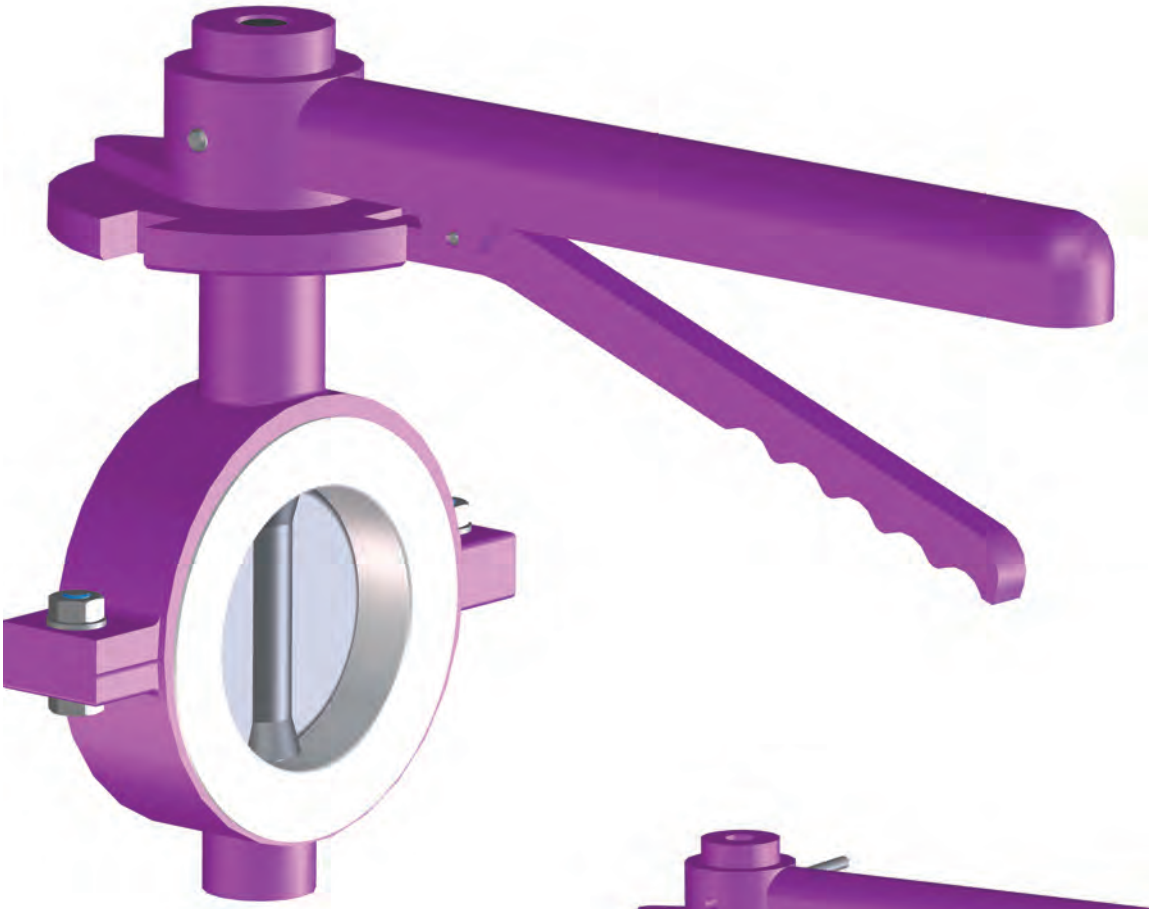

PRESSURE DETAILS UNI_1284				
DN	P.N.	HYDRAULIC TEST kg/cm²		WORKING PRESSURE kg/cm²
		OPEN	CLOSE	
50	7	10	7	4
60	7	10	7	4
80	7	10	7	4
100	4	10	4	3,5
125	4	10	4	3,5
150	4	10	4	3,5
200	4	10	4	3,5

NOTE: For different pressure details please ask the DPT

WEIGHT KG C.I.
10,000
12,000
14,000
28,000
30,000
33,000
48,000

DIMENSIONS							
Ø	A	B	C	D	E	F	G
50	204	43	40	260	90	108	148
65	224	48	44	260	108	115	165
80	239	52	46	260	125	134	200
100	318	53	50	450	150	160	220
125	338	57	53	450	173	190	250
150	382	57	53	470	204	220	280
200	440	68	64	500	254	270	340

Model GS33W LUG DSB

BUTTERFLY VALVES

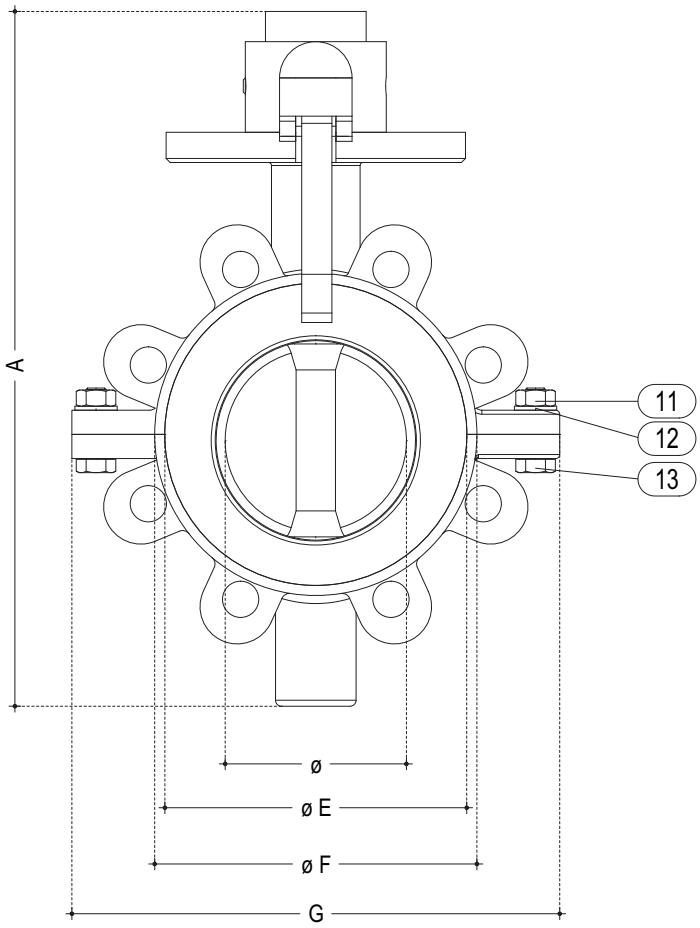

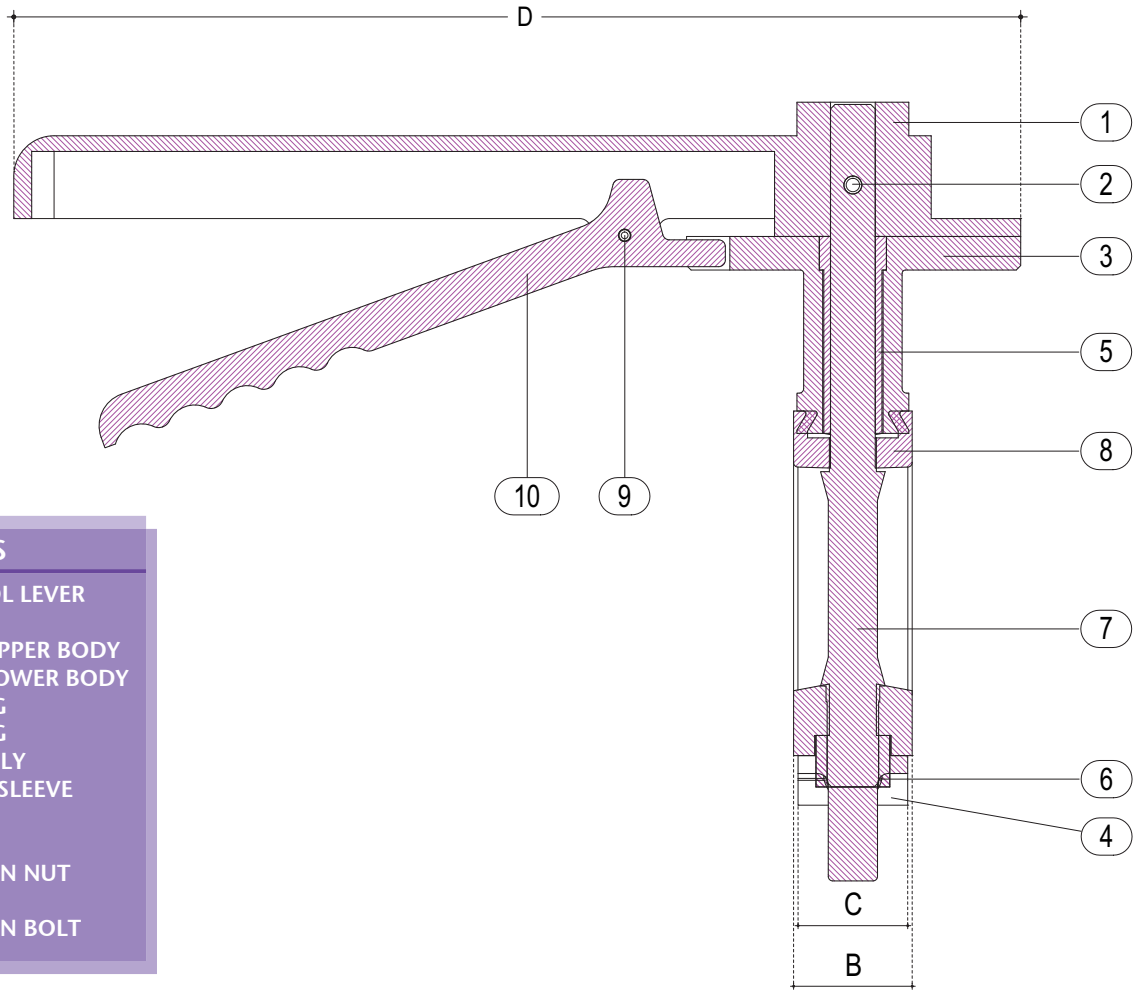

DETAILS	
1	CONTROL LEVER
2	SOCKET
3	VALVE UPPER BODY
4	VALVE LOWER BODY
5	BUSHING
6	BUSHING
7	BUTTERFLY
8	RUBBER SLEEVE
9	PIN
10	LEVER
11	HEXAGON NUT
12	WASHER
13	HEXAGON BOLT

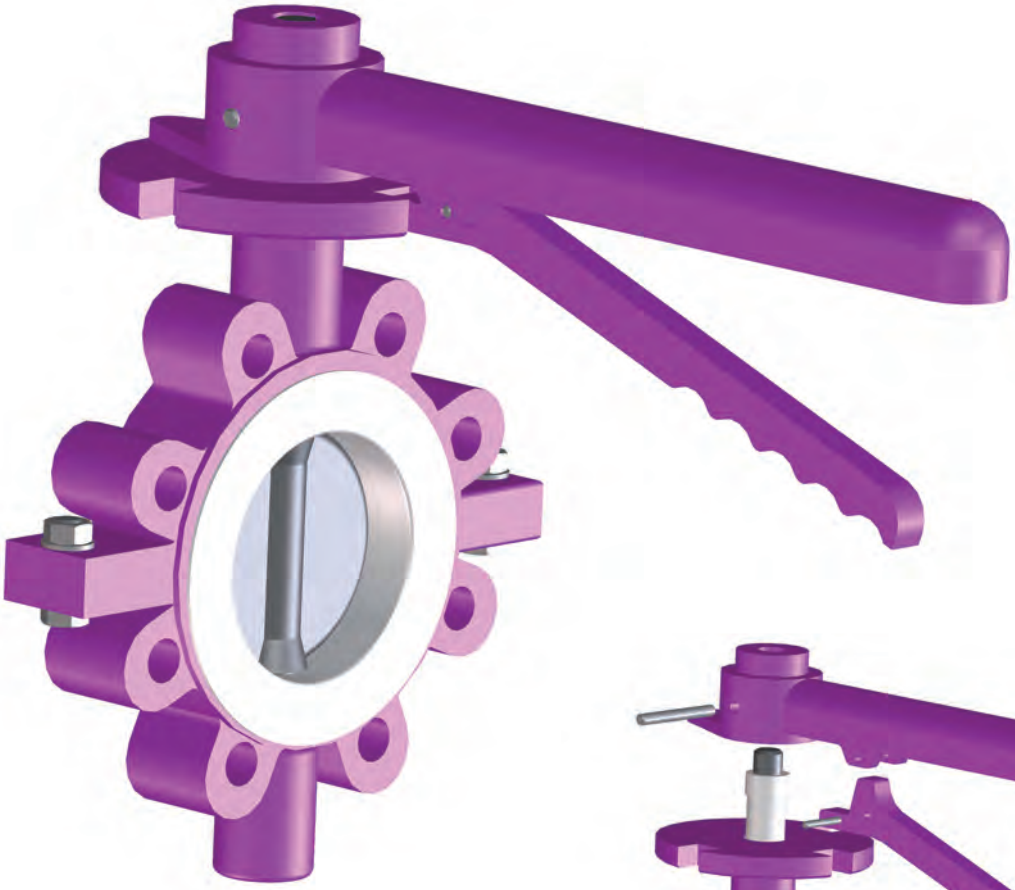

WEIGHT KG C.I.
10,000
12,000
14,000
28,000
30,000
33,000
48,000

PRESSURE DETAILS UNI_1284

DN	P.N.	HYDRAULIC TEST kg/cm² OPEN	HYDRAULIC TEST kg/cm² CLOSE	WORKING PRESSURE kg/cm²
50	7	10	7	4
60	7	10	7	4
80	7	10	7	4
100	4	10	4	3,5
125	4	10	4	3,5
150	4	10	4	3,5
200	4	10	4	3,5

NOTE: For different pressure details please ask the DPT

DIMENSIONS

Ø	A	B	C	D	E	F	G
50	204	43	40	260	90	108	148
65	224	48	44	260	108	115	165
80	239	52	46	260	125	134	200
100	318	53	50	450	150	160	220
125	338	57	53	450	173	190	250
150	382	57	53	470	204	220	280
200	440	68	64	500	254	270	340

Model GS34 DSB

BUTTERFLY VALVES

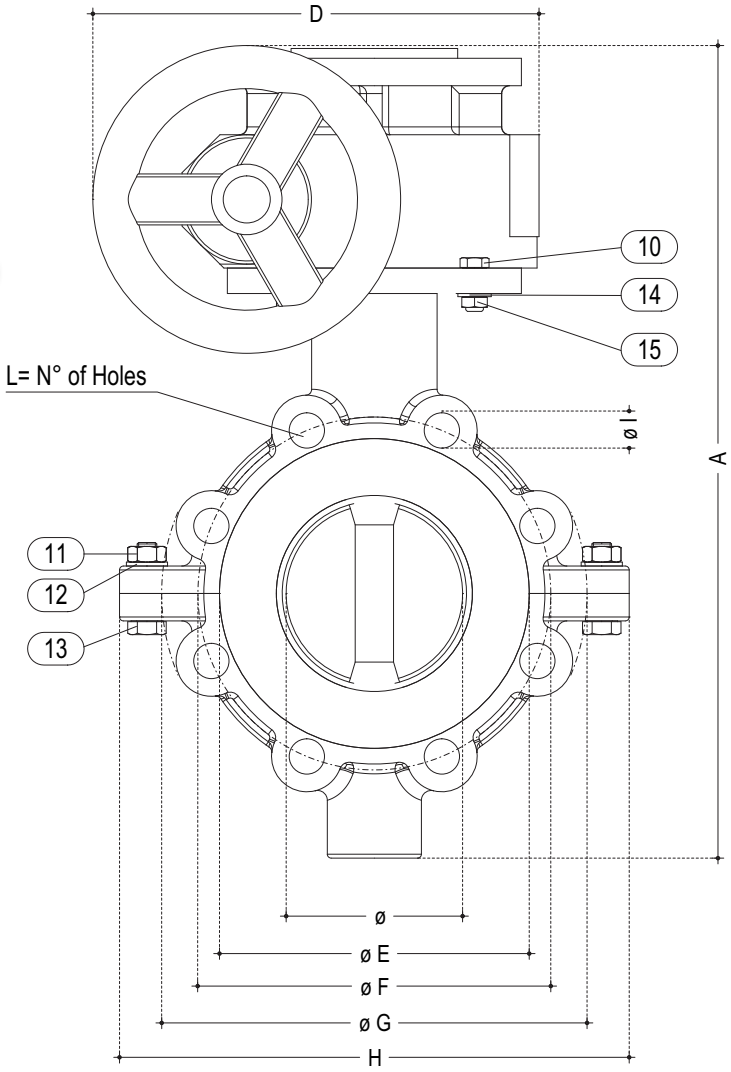

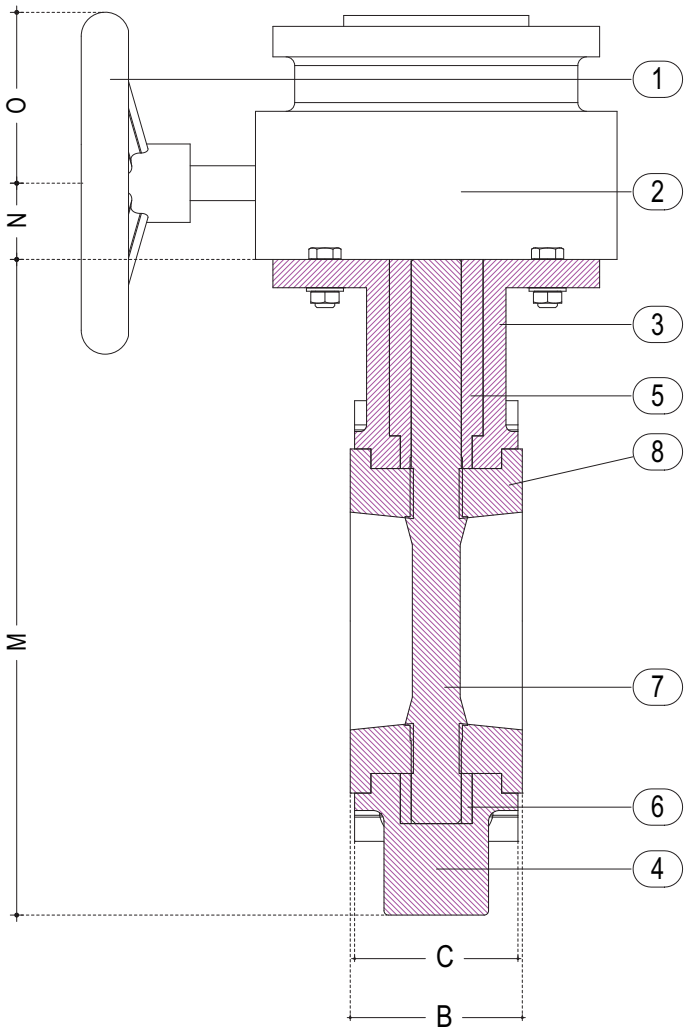

DETAILS	
1	CONTROL LEVER
2	RIDUCTOR
3	VALVE UPPER BODY
4	VALVE LOWER BODY
5	BUSHING
6	BUSHING
7	BUTTERFLY
8	RUBBER SLEEVE
10	HEXAGON BOLT
11	HEXAGON NUT
12	WASHER
13	HEXAGON BOLT
14	WASHER
15	HEXAGON NUT

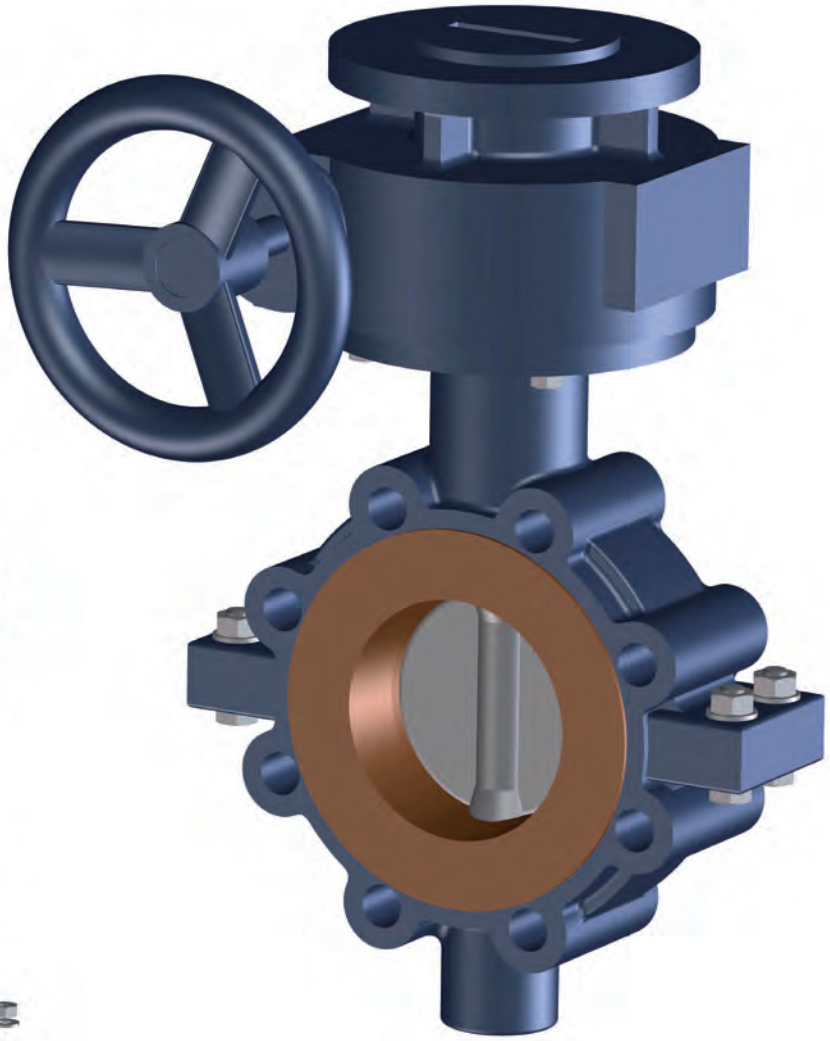

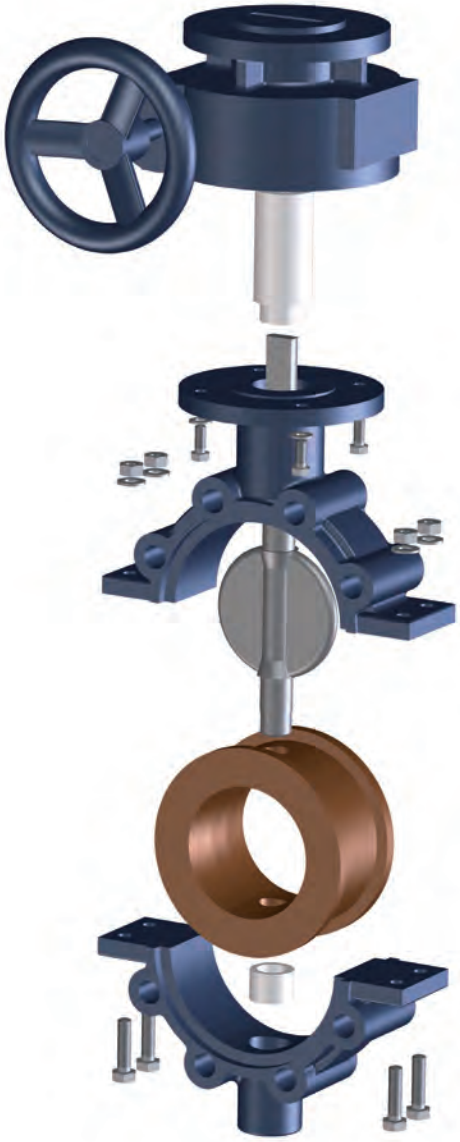

PRESSURE DETAILS UNI_1284

DN	P.N.	HYDRAULIC TEST kg/cm² OPEN	HYDRAULIC TEST kg/cm² CLOSE	WORKING PRESSURE kg/cm²
100	4	10	4	3,5
150	4	10	4	3,5
200	4	10	4	3,5
250	3,5	10	3,5	3
300	3,5	10	3,5	3
350	3	6	3	2,5
400	3	6	3	2,5
500	3	6	3	2,5
600	3	6	3	2,5

NOTE: For different pressure details please ask the DPT

WEIGHT KG C.I.
26,000
31,000
49,000
58,000
67,000
126,000
180,000
254,000
223,000

DIMENSIONS

Ø	A	B	C	D	E	F	G	H	I	L	M	N	0
100	465	78	72	260	160	190	229	280	19	8	305	60	100
150	535	88	84	260	210	241	280	355	22	8	375	60	100
200	595	95	90	260	260	298	343	420	22	8	435	60	100
250	675	100	98	235	310	362	406	485	26	12	495	80	100
300	725	110	105	235	360	432	483	530	26	12	545	80	100
350	862	116	110	235	430	476	533	634	29	12	682	80	100
400	1138	128	120	500	480	540	597	695	29	16	748	205	185
500	1250	168	160	500	590	635	700	820	32	20	860	205	185
600	1300	180	175	500	680	750	813	860	32	20	920	100	280

Model GS34W DSB

BUTTERFLY VALVES

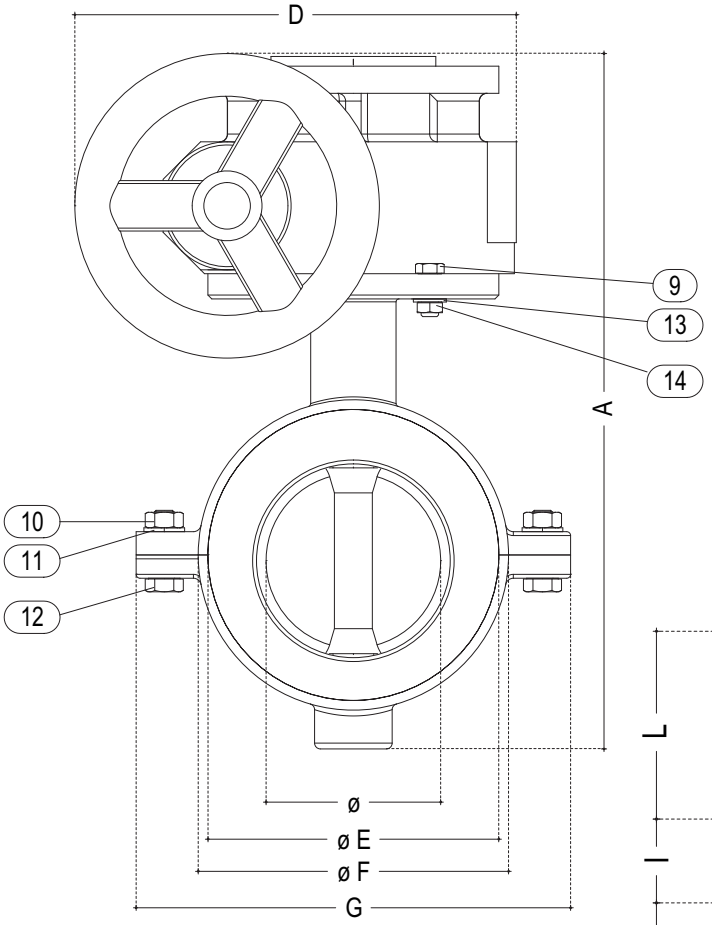

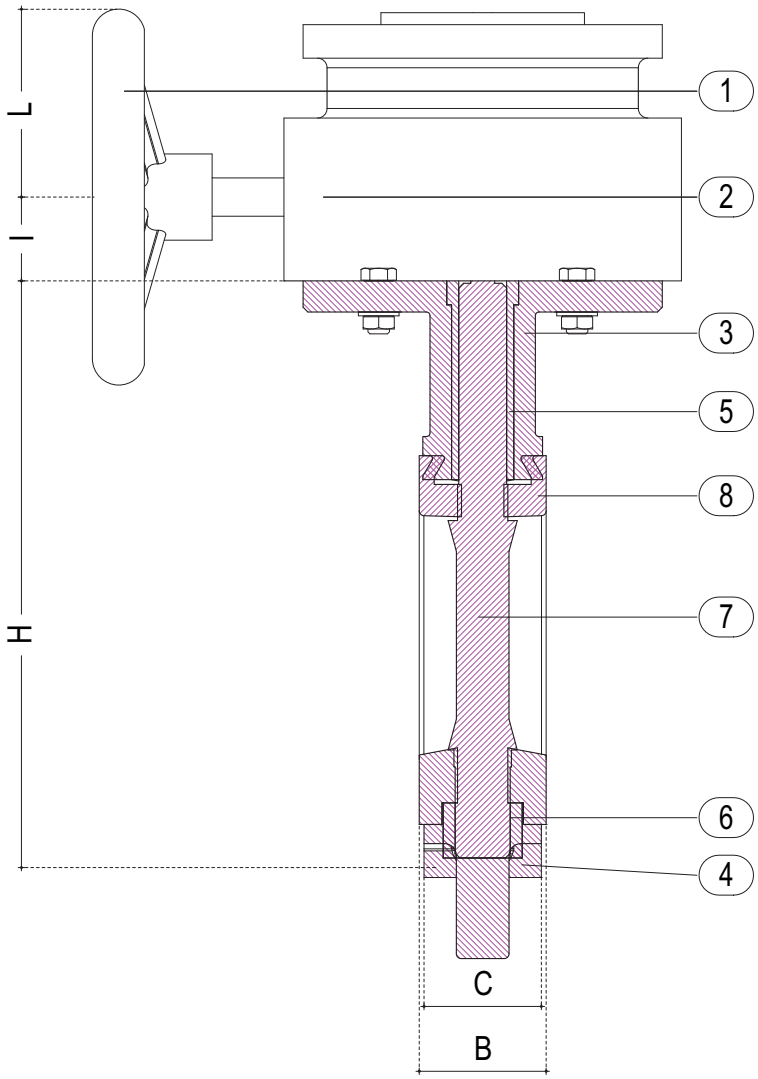

DETAILS	
1	CONTROL LEVER
2	RIDUCTOR
3	VALVE UPPER BODY
4	VALVE LOWER BODY
5	BUSHING
6	BUSHING
7	BUTTERFLY
8	RUBBER SLEEVE
9	HEXAGON BOLT
10	HEXAGON NUT
11	WASHER
12	HEXAGON BOLT
13	WASHER
14	HEXAGON NUT

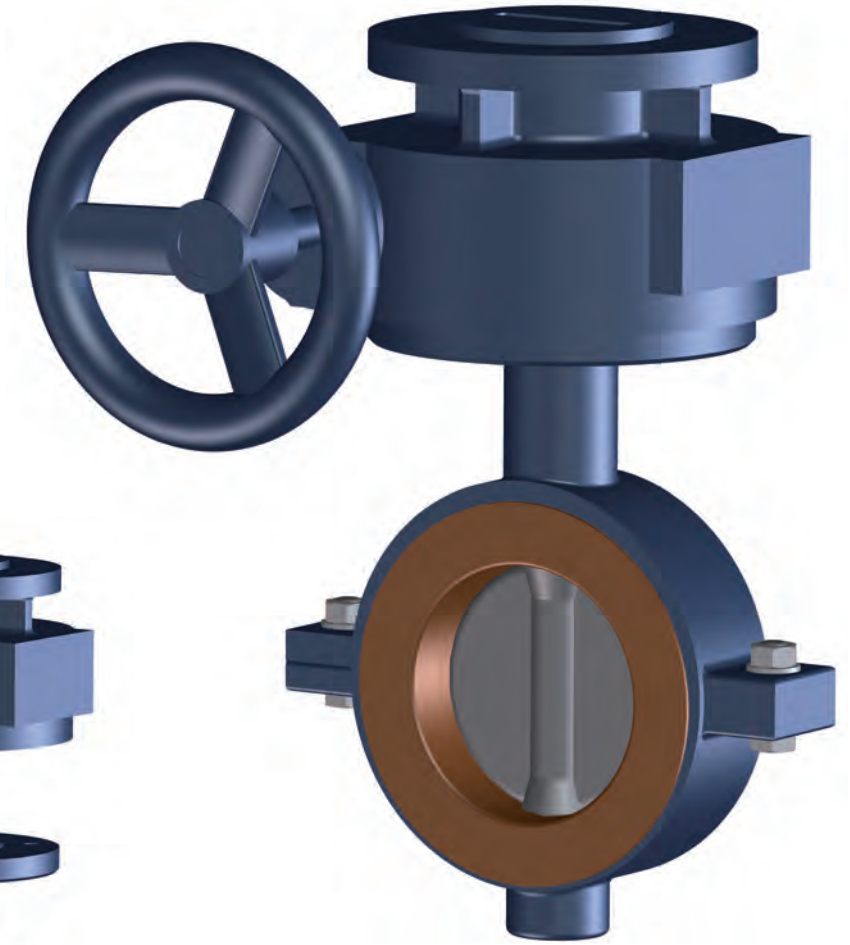

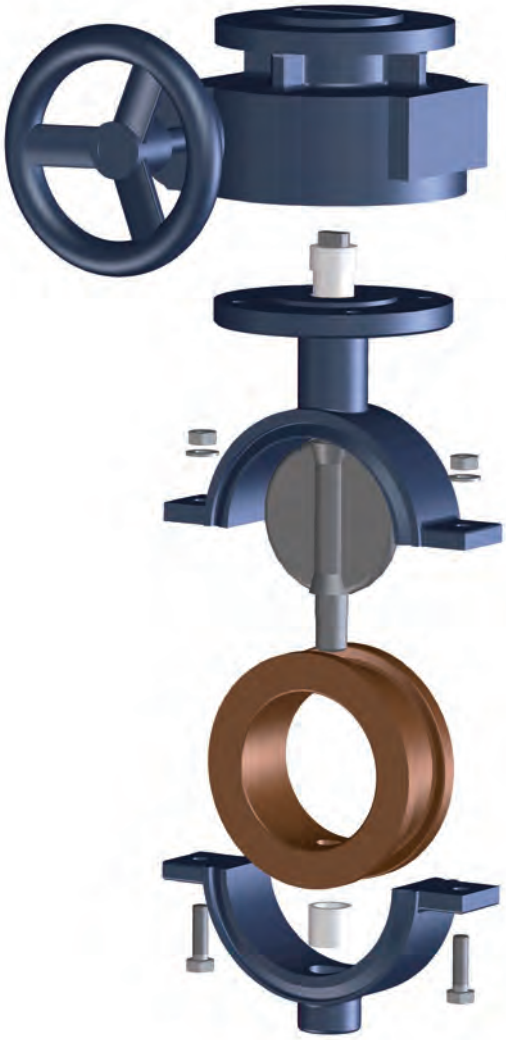

WEIGHT KG C.I.
10,000
12,000
14,000
22,000
24,000
29,000
42,000

PRESSURE DETAILS UNI_1284

DN	P.N.	HYDRAULIC TEST kg/cm²		WORKING PRESSURE kg/cm²
		OPEN	CLOSE	
50	7	10	7	6
65	7	10	7	6
80	7	10	7	6
100	4	10	4	3,5
125	4	10	4	3,5
150	4	10	4	3,5
200	4	10	4	3,5

NOTE: For different pressure details please ask the DPT

DIMENSIONS

Ø	A	B	C	D	E	F	G	H	I	L
50	300	43	40	150	90	108	148	175	50	75
65	320	48	44	150	108	115	165	195	50	75
80	335	52	46	150	125	134	200	210	50	75
100	410	53	50	260	150	160	220	250	60	100
125	430	57	53	260	173	190	250	270	60	100
150	470	57	53	260	204	220	280	310	60	100
200	530	68	64	260	254	270	340	370	60	100

Model GS34W LUG DSB

BUTTERFLY VALVES

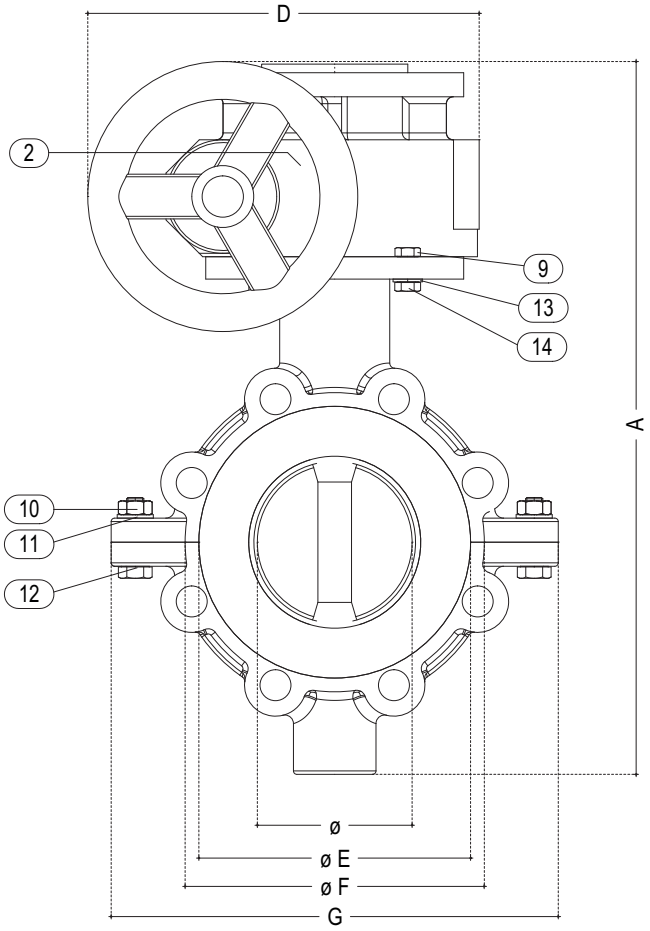

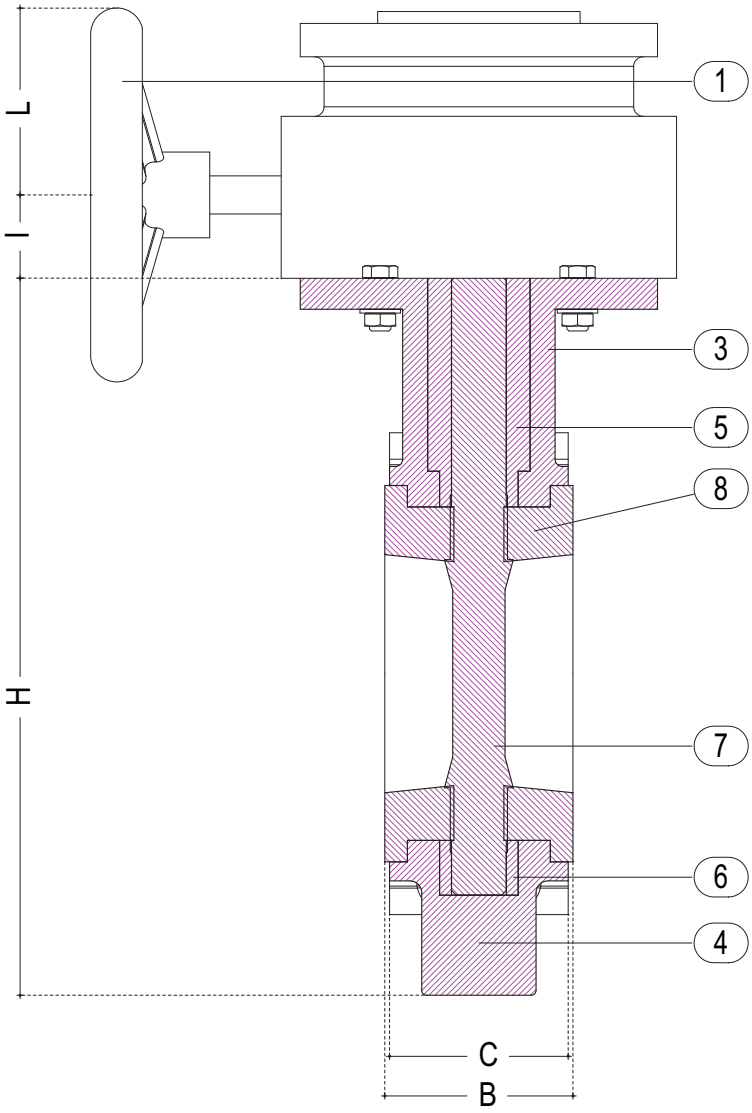

DETAILS	
1	CONTROL LEVER
2	RIDUCTOR
3	VALVE UPPER BODY
4	VALVE LOWER BODY
5	BUSHING
6	BUSHING
7	BUTTERFLY
8	RUBBER SLEEVE
9	HEXAGON BOLT
10	HEXAGON NUT
11	WASHER
12	HEXAGON BOLT
13	WASHER
14	HEXAGON NUT

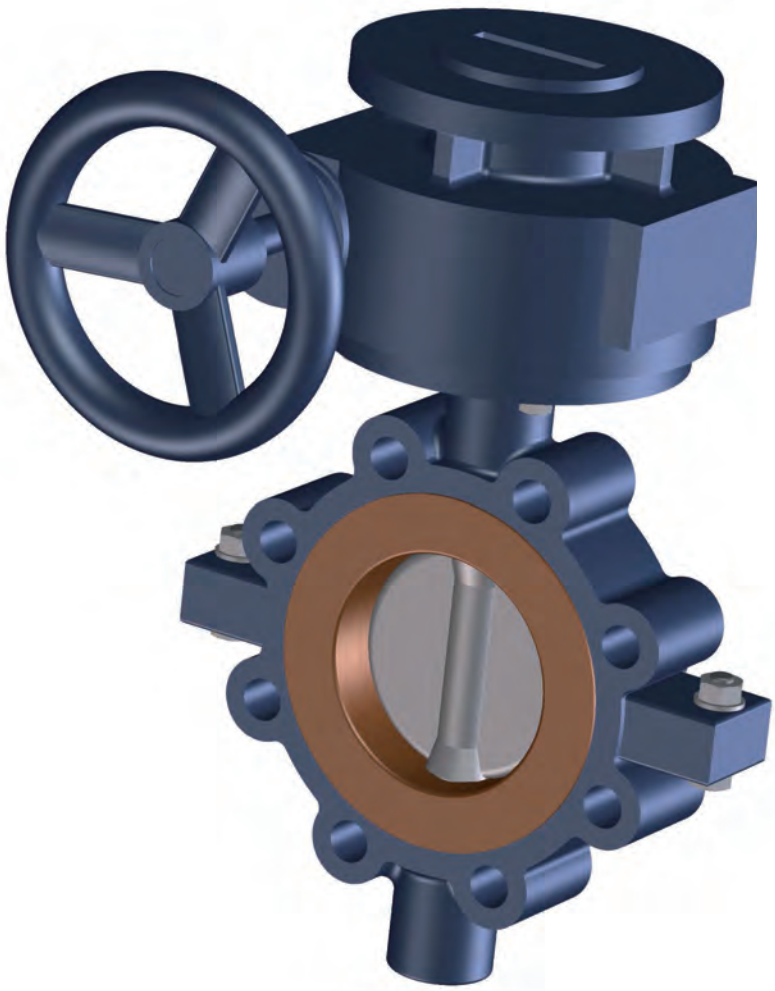

WEIGHT KG C.I.
10,000
12,000
14,000
22,000
24,000
29,000
42,000

PRESSURE DETAILS UNI_1284

DN	P.N.	HYDRAULIC TEST kg/cm²		WORKING PRESSURE kg/cm²
		OPEN	CLOSE	
50	7	10	7	6
65	7	10	7	6
80	7	10	7	6
100	4	10	4	3,5
125	4	10	4	3,5
150	4	10	4	3,5
200	4	10	4	3,5

NOTE: For different pressure details please ask the DPT

DIMENSIONS

Ø	A	B	C	D	E	F	G	H	I	L
50	300	43	40	150	90	108	148	175	50	75
65	320	48	44	150	108	115	165	195	50	75
80	335	52	46	150	125	134	200	210	50	75
100	410	53	50	260	150	160	220	250	60	100
125	430	57	53	260	173	190	250	270	60	100
150	470	57	53	260	204	220	280	310	60	100
200	530	68	64	260	254	270	340	370	60	100

Model GS38 DSB

BUTTERFLY VALVES

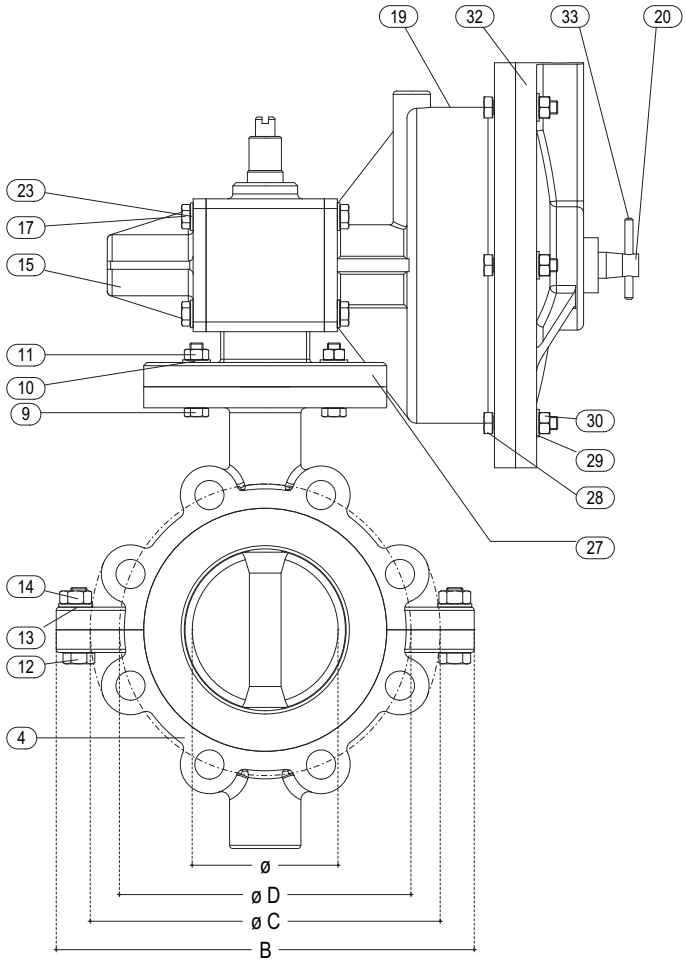

	DETAILS
1	DRIVE PIN
2	CAMPLING SCREW FOR BUSHING
3	VALVE UPPER BODY
4	VALVE LOWER BODY
5	BUSHING
6	BUSHING
7	BUTTERFLY
8	RUBBER SLEEVE
9	BOLT
10	WASHER
11	HEXAGON NUT
12	BOLT
13	WASHER
14	HEXAGON NUT
15	COVER
16	CYLINDER SUPPORT
17	BOLT
18	RACK
19	CYLINDER
20	PISTON
21	GASKET PISTON
22	BUSHING
23	WASHER
24	GEAR
25	"V"GASKET
26	COVER
27	FLANGE
28	BOLT
29	WASHER
30	HEXAGON NUT
31	OR GASKET
32	"V"GASKET
33	SOKET

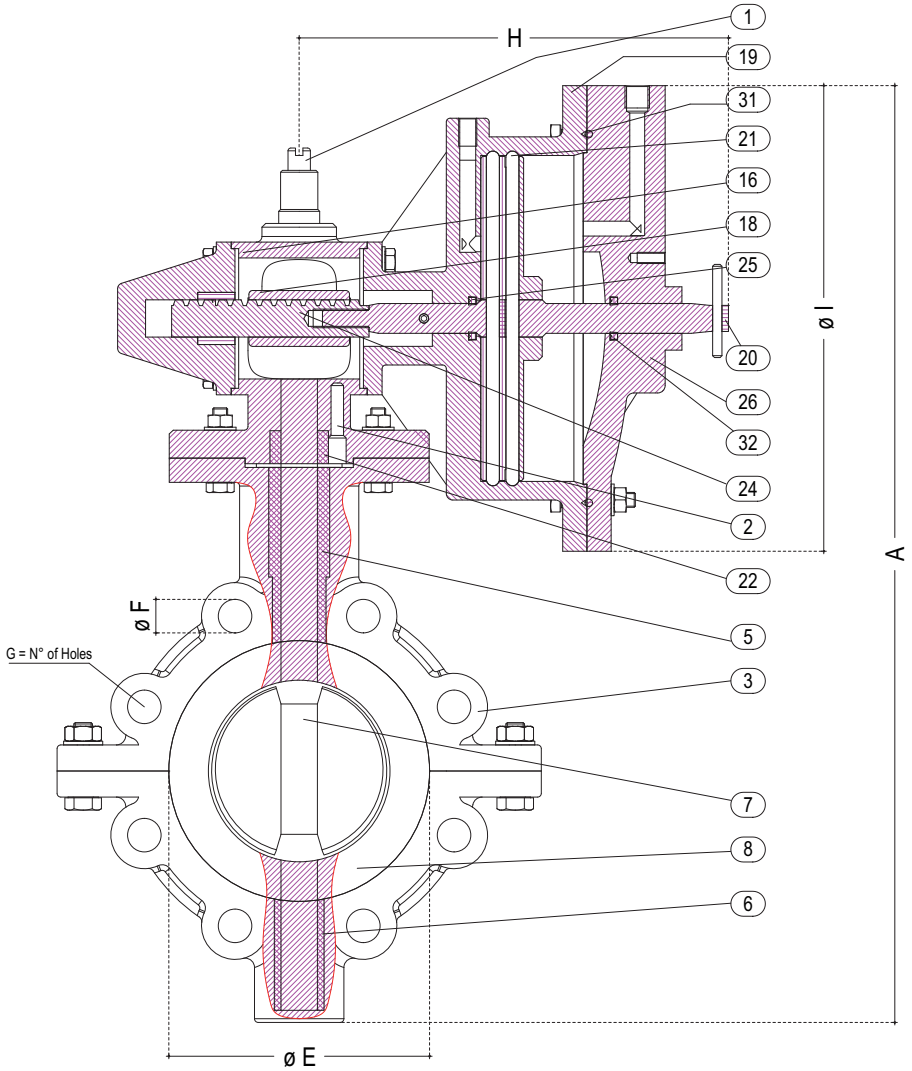

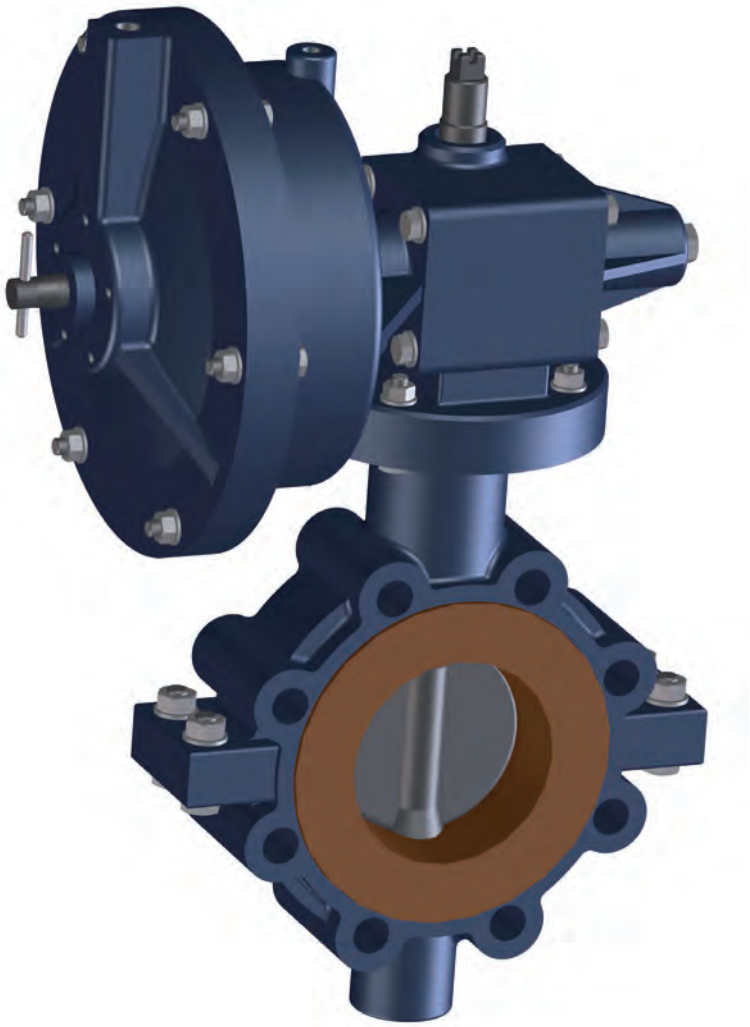

WEIGHT KG C.I.
9,000
12,000
15,000
33,000
43,000
48,000
58,000
78,000

AIR PRESSURE REQUIRED KG/CM²

dn	50	65	80	100	150	200	250	300
min.	3	3	3	3	3	3	3	3
max.	5	5	5	5	5	5	5	5

PRESSURE DETAILS UNI_1284

DN	P.N.	HYDRAULIC TEST kg/cm²		WORKING PRESSURE kg/cm²
		OPEN	CLOSE	
50	7	10	7	6
65	7	10	7	6
80	7	10	7	6
100	7	10	7	6
150	7	10	7	6
200	6	10	6	5
250	6	10	6	5
300	6	10	6	5

NOTE: For different pressure details please ask the DPT

DIMENSIONS

Ø	A	B	C	D	E	F	G	H	I
50	325	150	108	125	90	/	/	200	180
65	350	165	115	145	108	/	/	200	180
80	365	175	136	160	128	/	/	200	180
100	480	290	230	180	160	18	8	270	200
150	570	366	285	240	210	22	8	350	220
200	655	420	340	295	260	22	8	350	220
250	725	484	406	350	310	22	12	420	270
300	780	566	483	400	360	22	12	420	270

Model GS38W DSB

BUTTERFLY VALVES

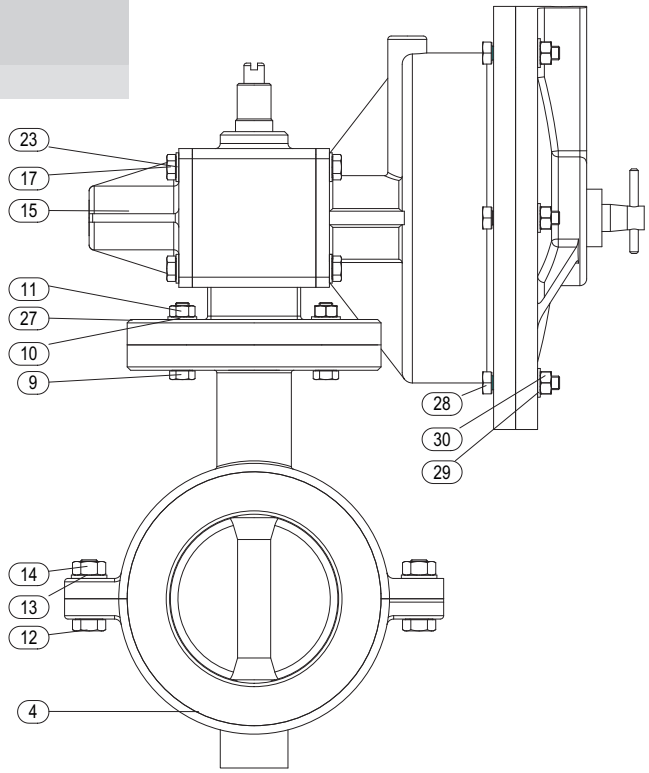

DETAILS	
1	DRIVE PIN
2	CAMPLING SCREW FOR BUSHING
3	VALVE UPPER BODY
4	VALVE LOWER BODY
5	BUSHING
6	BUSHING
7	BUTTERFLY
8	RUBBER SLEEVE
9	BOLT
10	WASHER
11	HEXAGON NUT
12	BOLT
13	WASHER
14	HEXAGON NUT
15	COVER
16	CYLINDER SUPPORT
17	BOLT
18	RACK
19	CYLINDER
20	PISTON
21	GASKET PISTON
22	BUSHING
23	WASHER
24	GEAR
25	"V"GASKET
26	COVER
27	FLANGE
28	BOLT
29	WASHER
30	HEXAGON NUT
31	OR GASKET
32	"V"GASKET
33	SOKET

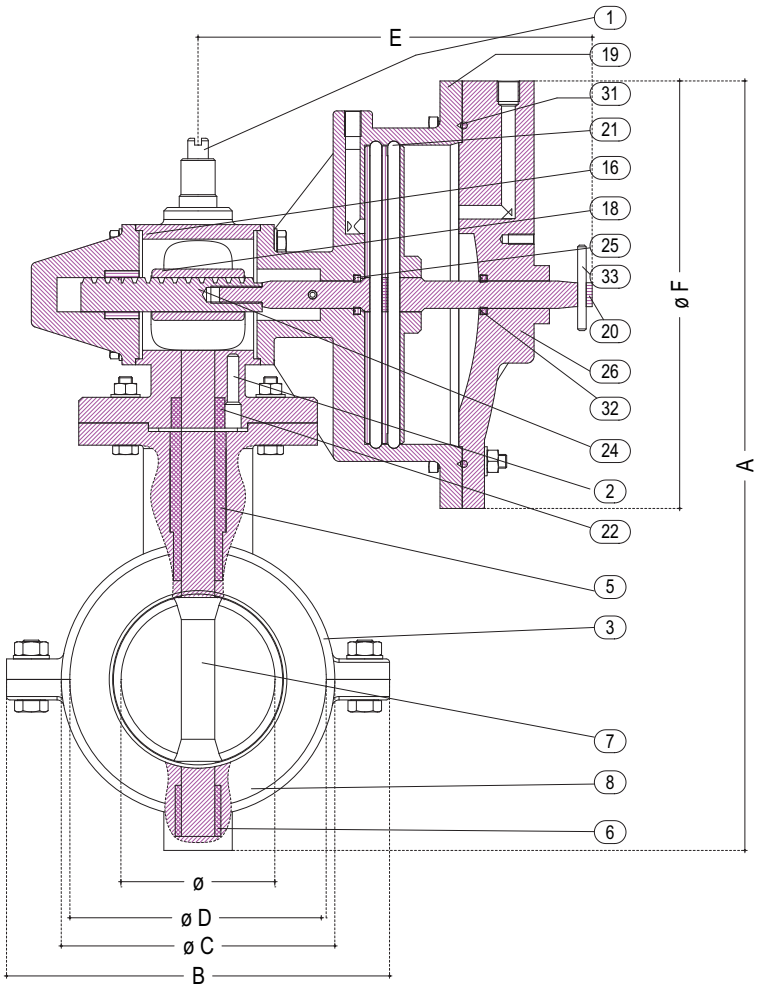

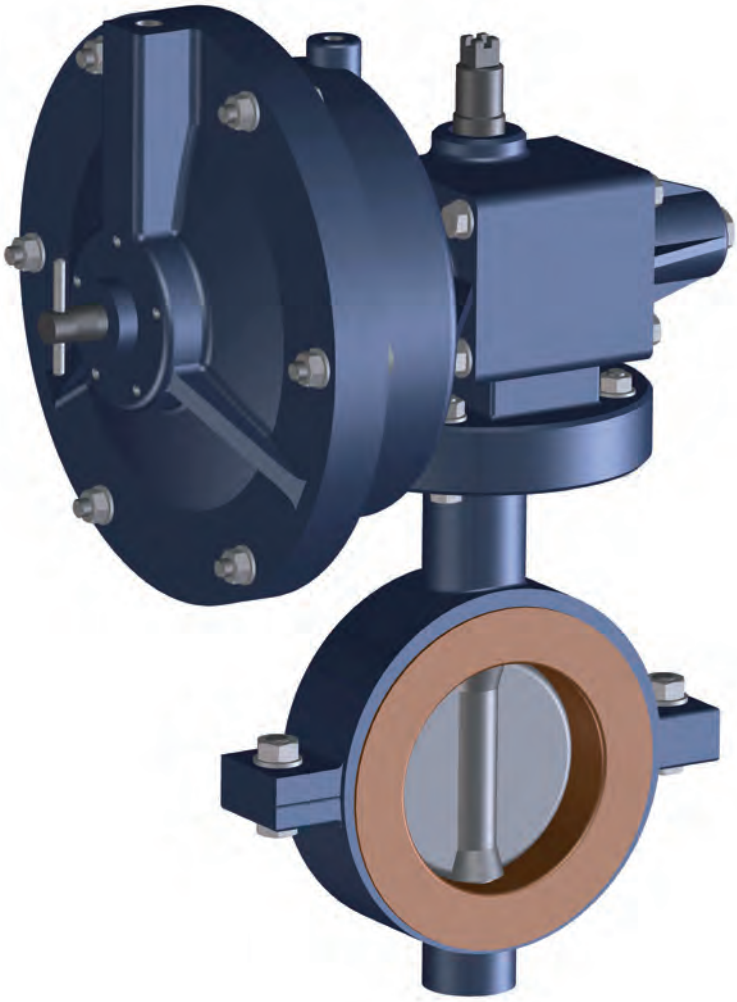

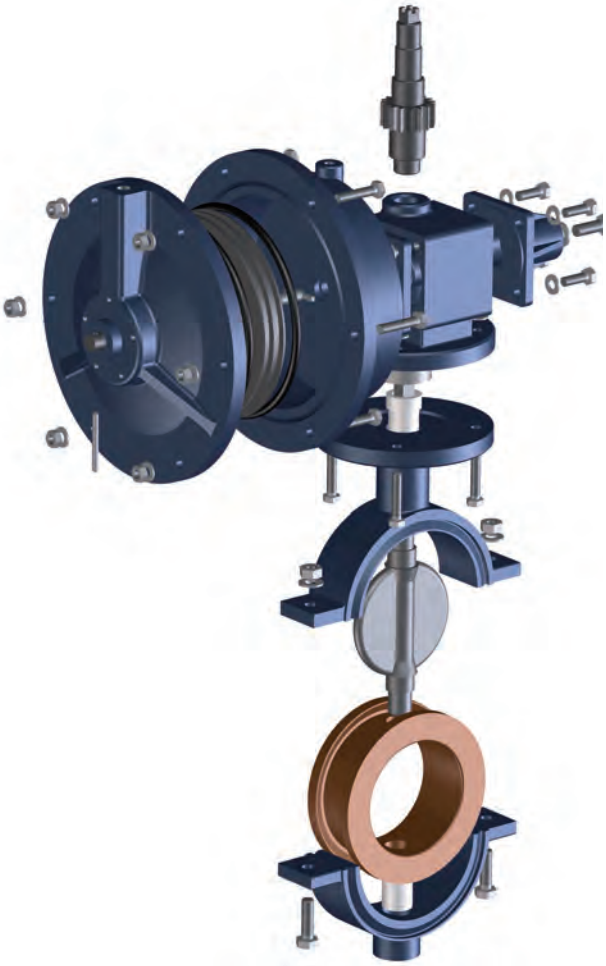

AIR PRESSURE REQUIRED KG/CM²

dn	50	65	80	100	125	150	200
min.	3	3	3	3	3	3	3
max.	5	5	5	5	5	5	5

PRESSURE DETAILS UNI_1284

DN	P.N.	HYDRAULIC TEST kg/cm²		WORKING PRESSURE kg/cm²
		OPEN	CLOSE	
50	7	10	7	6
65	7	10	7	6
80	7	10	7	6
100	7	10	7	6
125	7	10	7	6
150	7	10	7	6
200	6	10	6	5

NOTE: For different pressure details please ask the DPT

WEIGHT KG

C.I.
7,000
10,000
12,000
30,000
35,000
40,000
44,000

DIMENSIONS

Ø	A	B	C	D	E	F
50	345	148	108	90	200	180
65	365	165	115	108	200	180
80	380	200	134	125	200	180
100	423	220	160	150	270	200
125	463	250	190	173	270	200
150	503	280	220	204	350	220
200	590	340	270	254	350	220

Model GS38W LUG DSB

BUTTERFLY VALVES

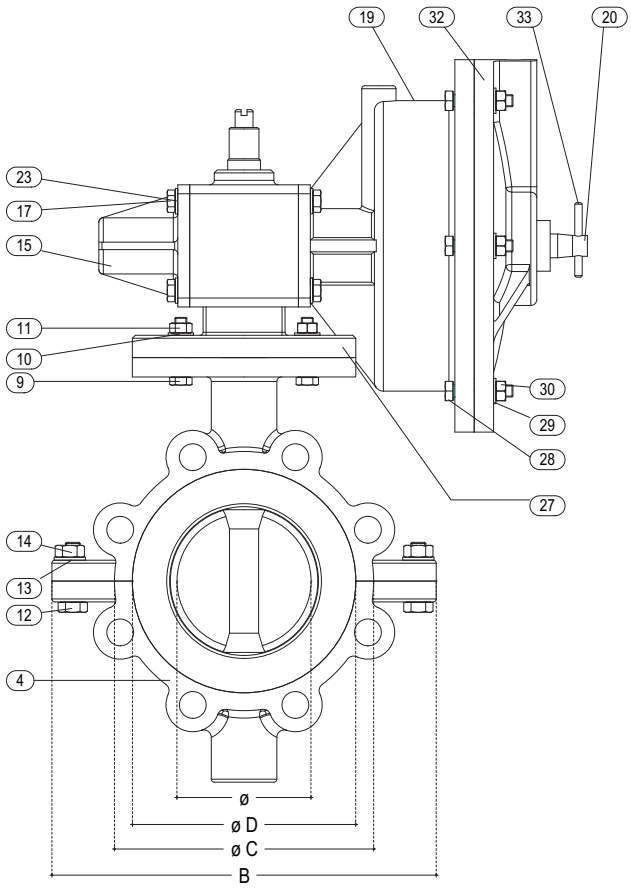

DETAILS	
1	DRIVE PIN
2	CAMPLING SCREW FOR BUSHING
3	VALVE UPPER BODY
4	VALVE LOWER BODY
5	BUSHING
6	BUSHING
7	BUTTERFLY
8	RUBBER SLEEVE
9	BOLT
10	WASHER
11	HEXAGON NUT
12	BOLT
13	WASHER
14	HEXAGON NUT
15	COVER
16	CYLINDER SUPPORT
17	BOLT
18	RACK
19	CYLINDER
20	PISTON
21	GASKET PISTON
22	BUSHING
23	WASHER
24	GEAR
25	"V"GASKET
26	COVER
27	FLANGE
28	BOLT
29	WASHER
30	HEXAGON NUT
31	OR GASKET
32	"V"GASKET
33	SOKET

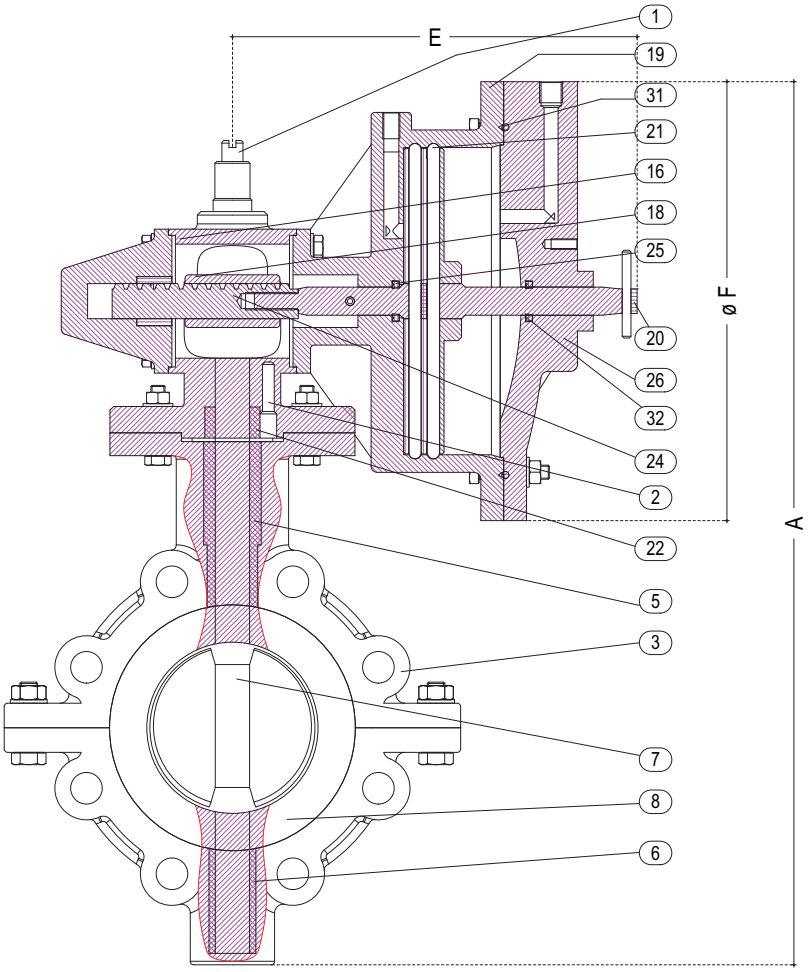

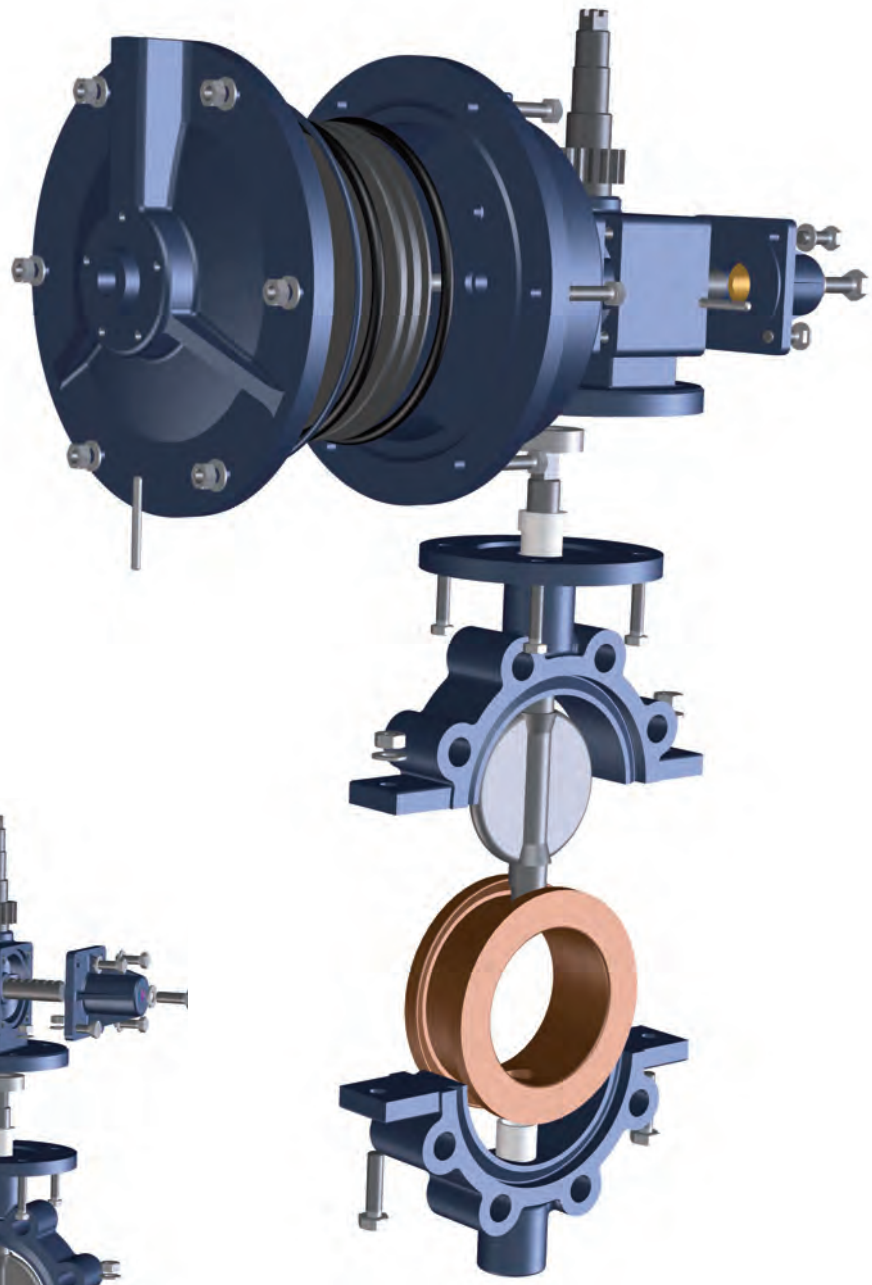

AIR PRESSURE REQUIRED KG/CM²							
dn	50	65	80	100	125	150	200
min.	3	3	3	3	3	3	3
max.	5	5	5	5	5	5	5

PRESSURE DETAILS UNI_1284				
DN	P.N.	HYDRAULIC TEST kg/cm²		WORKING PRESSURE kg/cm²
		OPEN	CLOSE	
50	7	10	7	6
65	7	10	7	6
80	7	10	7	6
100	7	10	7	6
125	7	10	7	6
150	7	10	7	6
200	6	10	6	5

NOTE: For different pressure details please ask the DPT

WEIGHT KG C.I.
7,000
10,000
12,000
30,000
35,000
40,000
44,000

DIMENSIONS						
Ø	A	B	C	D	E	F
50	345	148	108	90	200	180
65	365	165	115	108	200	180
80	380	200	134	125	200	180
100	423	220	160	150	270	200
125	463	250	190	173	270	200
150	503	280	220	204	350	220
200	590	340	270	254	350	220

Model GS40 DSB

BUTTERFLY VALVES

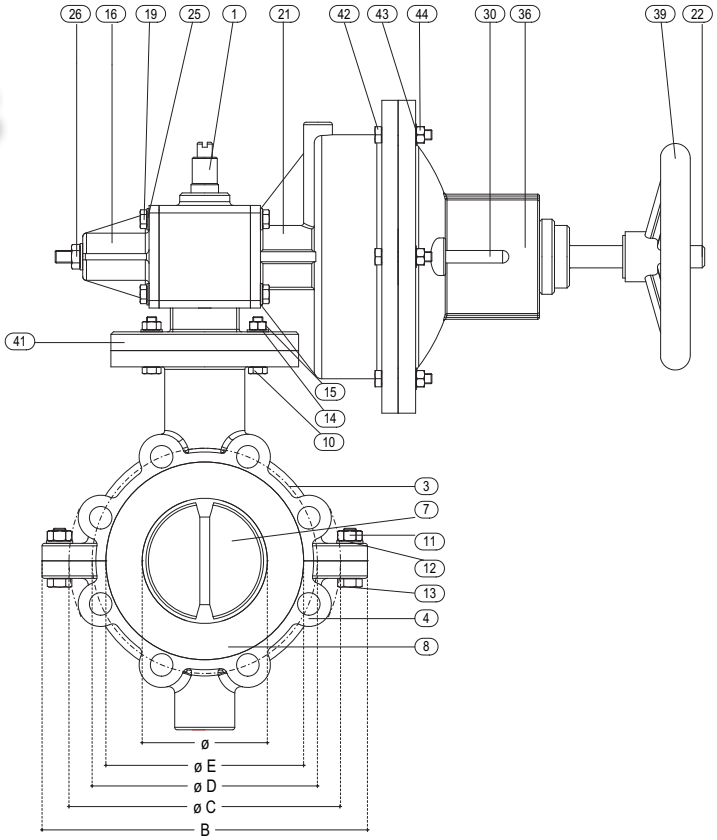

DETAILS	
1	DRIVE PIN
2	CAMPLING SCREW FOR BUSHING
3	VALVE UPPER BODY
4	VALVE LOWER BODY
5	BUSHING
6	BUSHING
7	BUTTERFLY
8	RUBBER SLEEVE
9	KEY
10	BOLT
11	HEXAGON NUT
12	WASHER
13	BOLT
14	WASHER
15	HEXAGON NUT
16	COVER
17	SUPPORT CYLINDER
18	GASKET OR
19	BOLT
20	RACK
21	CYLINDER
22	PISTON
23	GASKET PISTON
24	BUSHING
25	WASHER
26	HEXAGON NUT
27	ADJUSTEMENT SCREWS
28	GEAR
29	"V"GASKET
30	GUIDE PIN
31	SOKET
32	BUSHING
33	BUSHING OR
34	SPRINGS
35	GASKET OR
36	COVER
37	BUSHING
38	REGOLATOR BUSHING
39	WHEEL
40	BUSHING
41	FLANGE
42	BOLT
43	WASHER
44	HEXAGON NUT

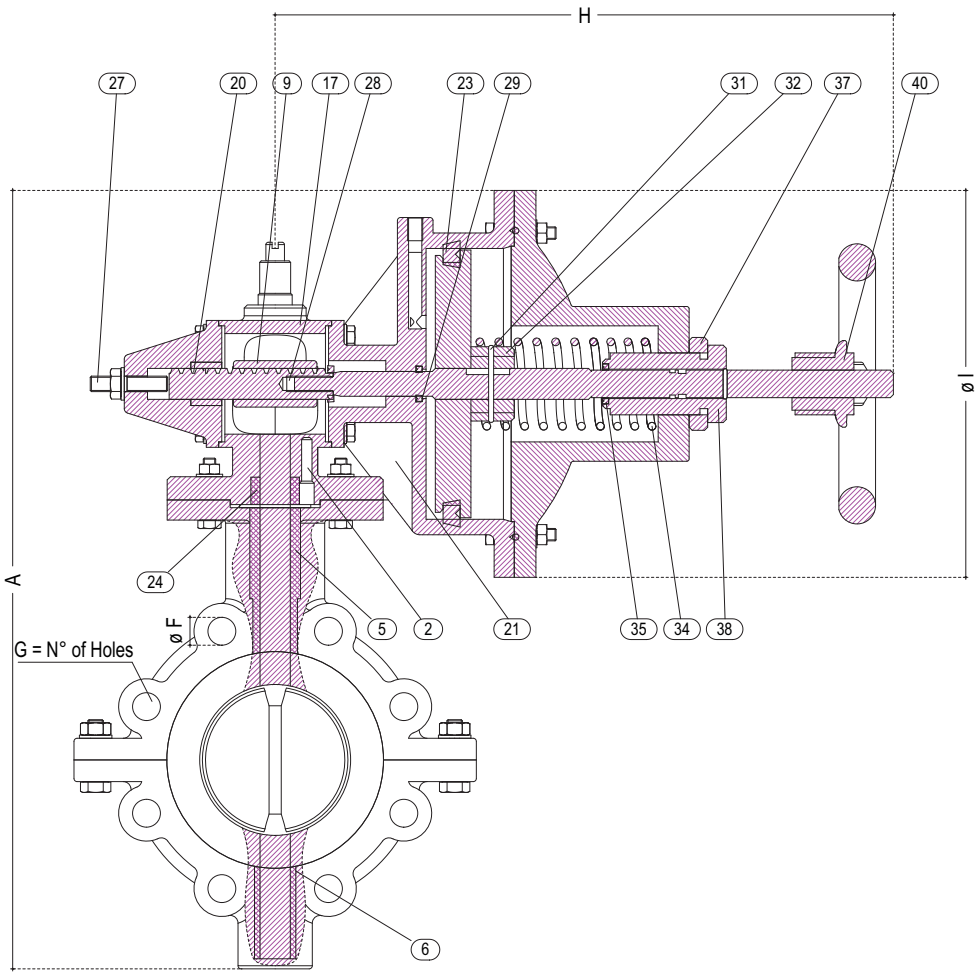

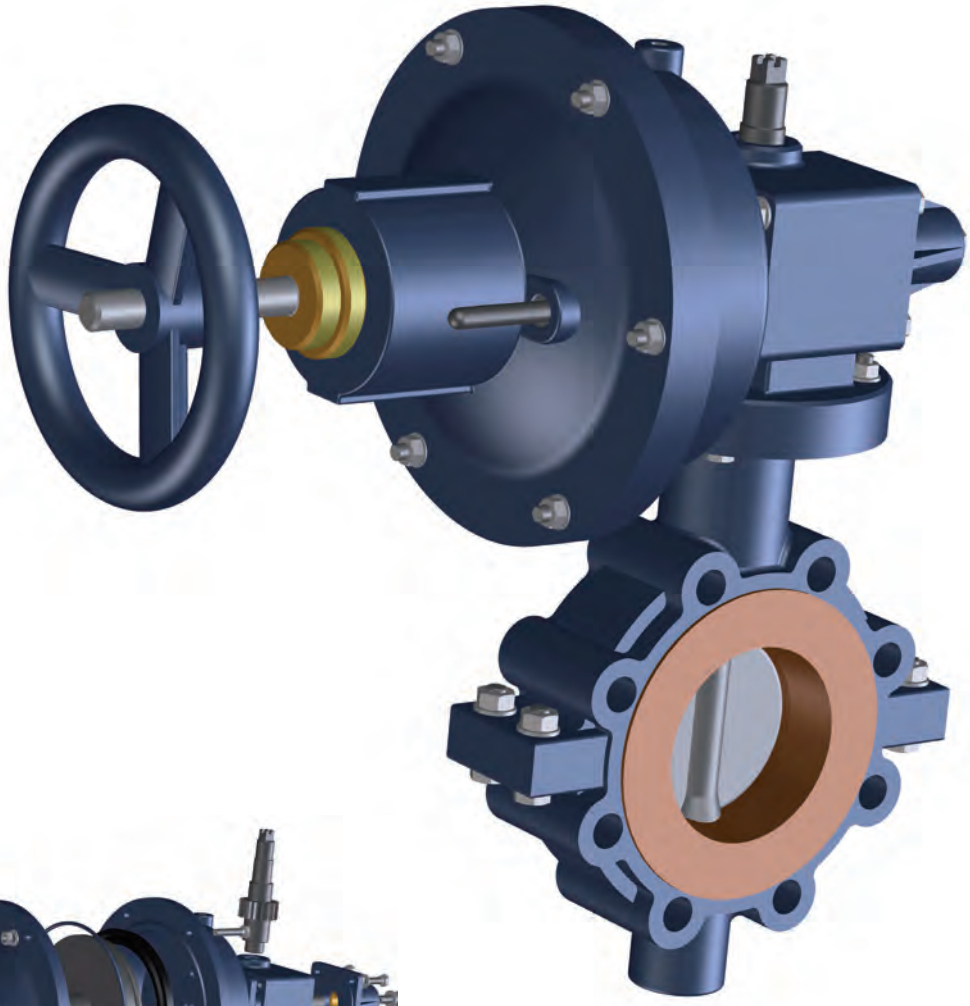

WEIGHT KG C.I.
38,000
48,000
55,000
65,000
83,000

AIR PRESSURE REQUIRED KG/CM²					
dn	100	150	200	250	300
min.	4	4	4	4	4
max.	6	6	6	6	6

PRESSURE DETAILS UNI_1284				
DN	P.N.	HYDRAULIC TEST kg/cm² OPEN	HYDRAULIC TEST kg/cm² CLOSE	WORKING PRESSURE kg/cm²
100	7	10	7	6
150	7	10	7	6
200	6	10	6	5
250	6	10	6	5
300	6	10	6	5

NOTE: For different pressure details please ask the DPT

DIMENSIONS									
Ø	A	B	C	D	E	F	G	H	I
100	480	290	230	180	160	18	8	400	200
150	570	366	285	240	210	22	8	400	200
200	655	420	340	295	260	22	8	550	220
250	725	484	406	350	310	22	12	600	270
300	780	566	483	400	360	22	12	600	270

Model GS40A DSB

BUTTERFLY VALVES

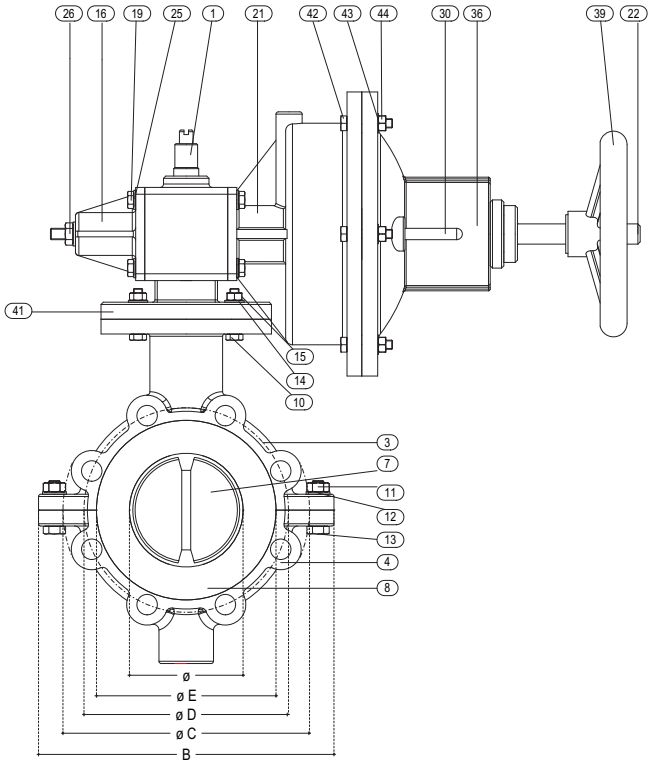

DETAILS	
1	DRIVE PIN
2	CAMPLING SCREW FOR BUSHING
3	VALVE UPPER BODY
4	VALVE LOWER BODY
5	BUSHING
6	BUSHING
7	BUTTERFLY
8	RUBBER SLEEVE
9	KEY
10	BOLT
11	HEXAGON NUT
12	WASHER
13	BOLT
14	WASHER
15	HEXAGON NUT
16	COVER
17	SUPPORT CYLINDER
18	GASKET OR
19	BOLT
20	RACK
21	CYLINDER
22	PISTON
23	GASKET PISTON
24	BUSHING
25	WASHER
26	HEXAGON NUT
27	ADJUSTEMENT SCREWS
28	GEAR
29	"V"GASKET
30	GUIDE PIN
31	SOKET
32	BUSHING
33	BUSHING OR
34	SPRINGS
35	GASKET OR
36	COVER
37	BUSHING
38	REGOLATOR BUSHING
39	WHEEL
40	BUSHING
41	FLANGE
42	BOLT
43	WASHER
44	HEXAGON NUT

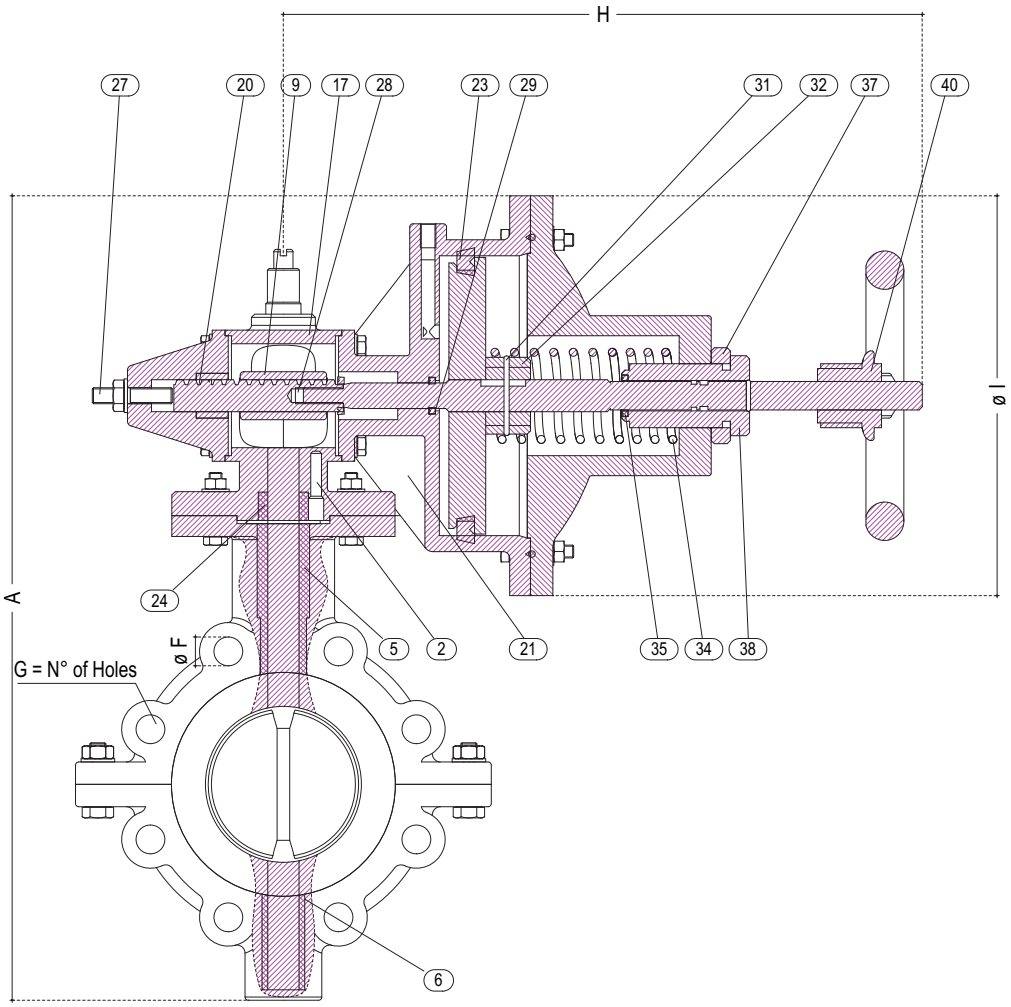

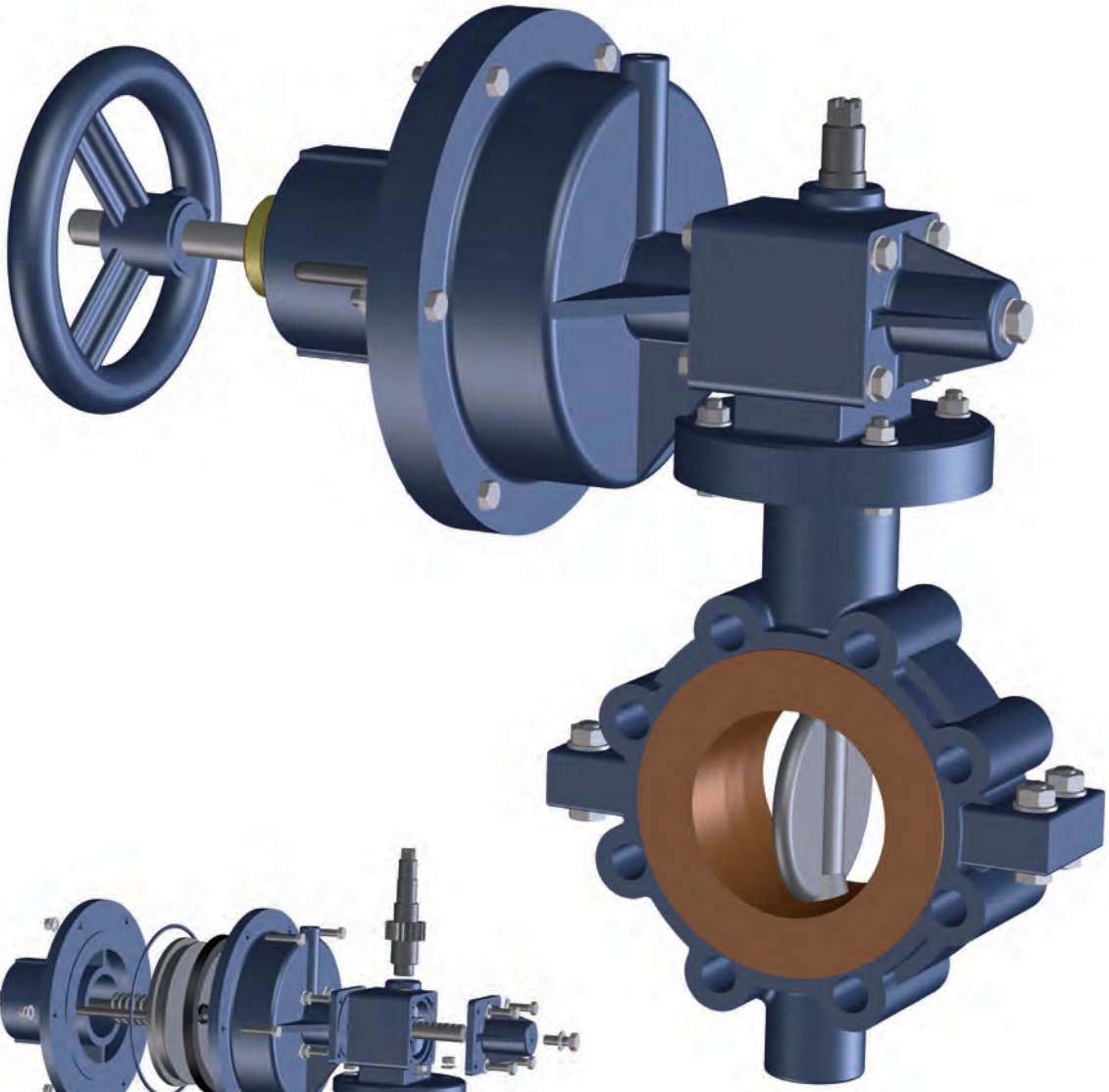

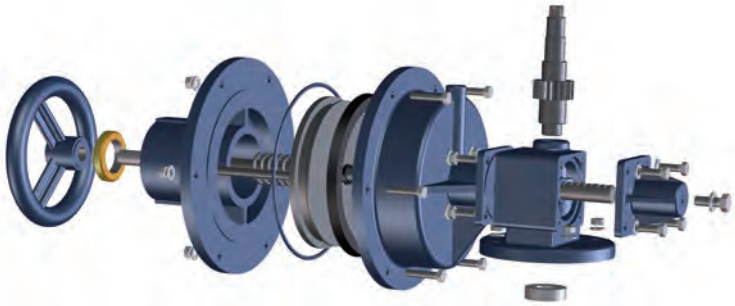

WEIGHT KG C.I.
38,000
48,000
55,000
65,000
83,000

AIR PRESSURE REQUIRED KG/CM²					
dn	100	150	200	250	300
min.	4	4	4	4	4
max.	6	6	6	6	6

PRESSURE DETAILS UNI_1284				
DN	P.N.	HYDRAULIC TEST kg/cm²		WORKING PRESSURE kg/cm²
		OPEN	CLOSE	
100	7	10	7	6
150	7	10	7	6
200	6	10	6	5
250	6	10	6	5
300	6	10	6	5

NOTE: For different pressure details please ask the DPT

DIMENSIONS									
Ø	A	B	C	D	E	F	G	H	I
100	480	290	230	180	160	18	8	400	200
150	570	366	285	240	210	22	8	400	200
200	655	420	340	295	260	22	8	550	220
250	725	484	406	350	310	22	12	600	270
300	780	566	483	400	360	22	12	600	270

Model GS40W DSB

BUTTERFLY VALVES

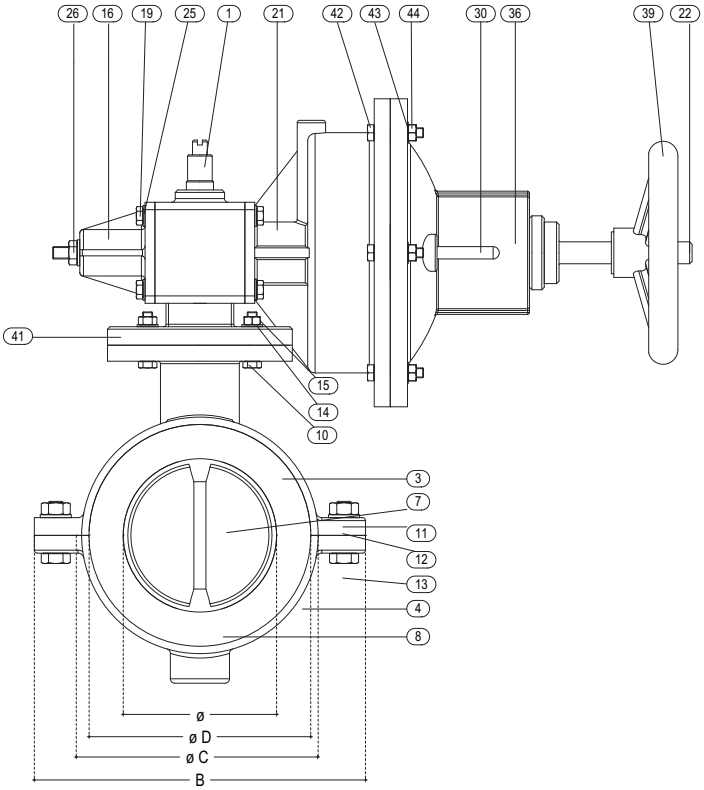

DETAILS	
1	DRIVE PIN
2	CAMPLING SCREW FOR BUSHING
3	VALVE UPPER BODY
4	VALVE LOWER BODY
5	BUSHING
6	BUSHING
7	BUTTERFLY
8	RUBBER SLEEVE
9	KEY
10	BOLT
11	HEXAGON NUT
12	WASHER
13	BOLT
14	WASHER
15	HEXAGON NUT
16	COVER
17	SUPPORT CYLINDER
18	GASKET OR
19	BOLT
20	RACK
21	CYLINDER
22	PISTON
23	GASKET PISTON
24	BUSHING
25	WASHER
26	HEXAGON NUT
27	ADJUSTEMENT SCREWS
28	GEAR
29	"V"GASKET
30	GUIDE PIN
31	SOKET
32	BUSHING
33	BUSHING OR
34	SPRINGS
35	GASKET OR
36	COVER
37	BUSHING
38	REGOLATOR BUSHING
39	WHEEL
40	BUSHING
41	FLANGE
42	BOLT
43	WASHER
44	HEXAGON NUT

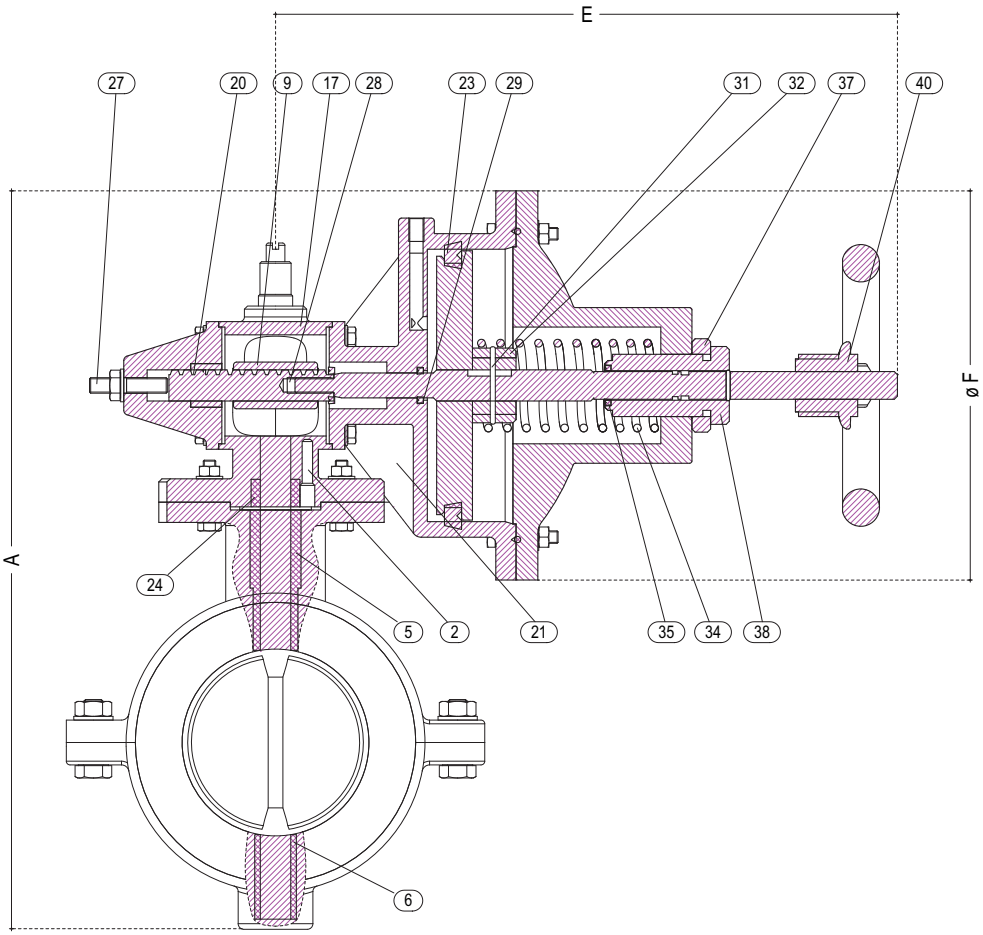

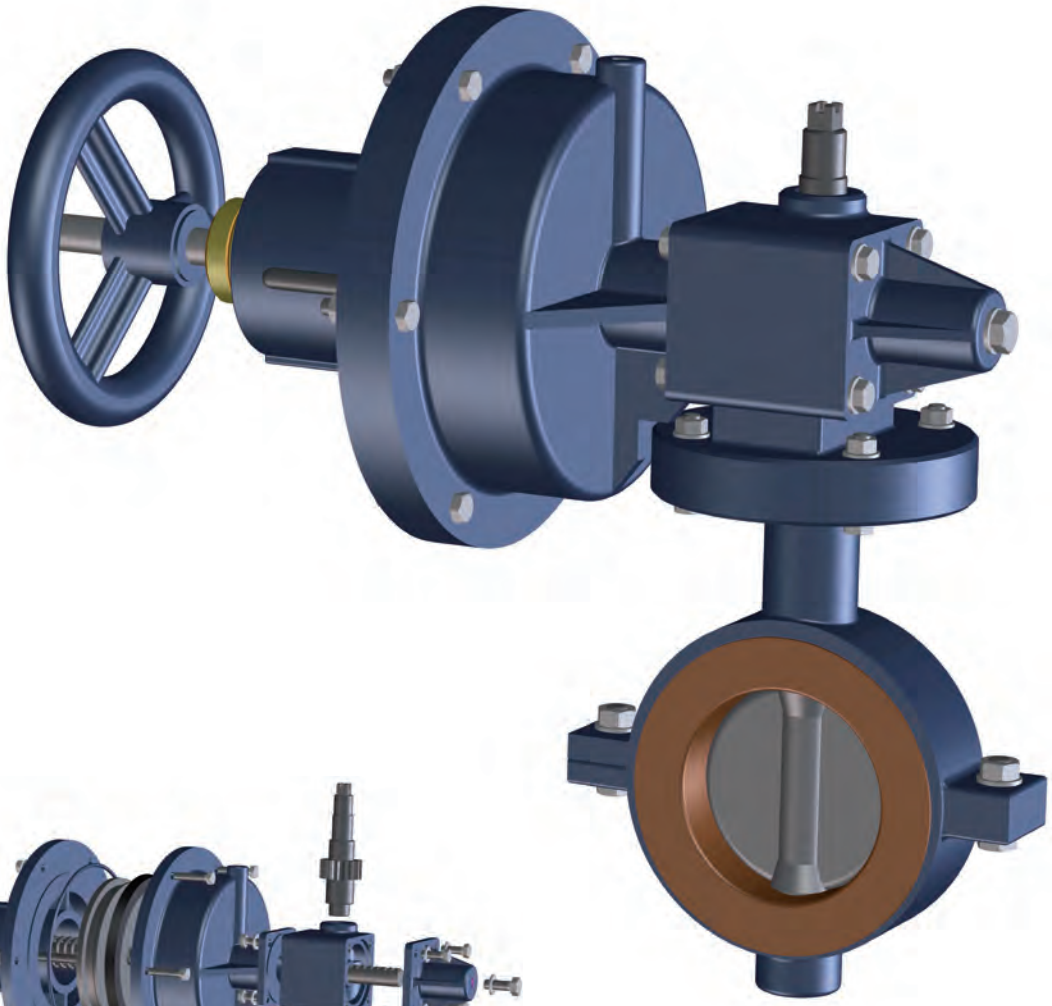

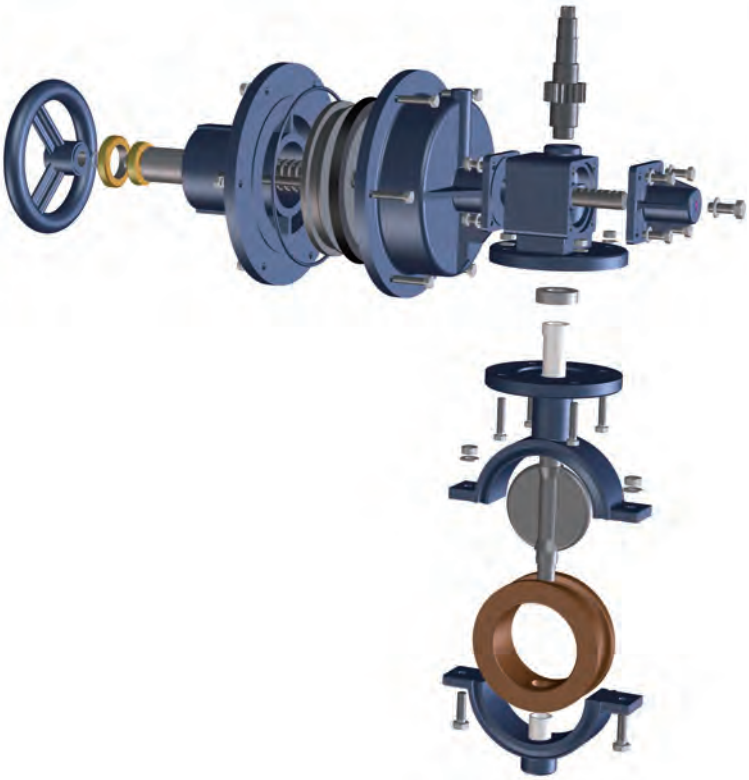

AIR PRESSURE REQUIRED KG/CM²							
dn	50	65	80	100	125	150	200
min.	4	4	4	4	4	4	4
max.	6	6	6	6	6	6	6

PRESSURE DETAILS UNI_1284				
DN	P.N.	HYDRAULIC TEST kg/cm²		WORKING PRESSURE kg/cm²
		OPEN	CLOSE	
50	7	10	7	6
65	7	10	7	6
80	7	10	7	6
100	7	10	7	6
125	7	10	7	6
150	7	10	7	6
200	6	10	6	5

NOTE: For different pressure details please ask the DPT

WEIGHT KG C.I.
8,000
11,000
13,000
32,000
37,000
43,000
47,000

DIMENSIONS						
Ø	A	B	C	D	E	F
50	345	148	108	90	380	180
65	365	165	115	108	380	180
80	380	200	134	125	380	180
100	423	220	160	150	400	200
125	463	250	190	173	400	200
150	503	280	220	204	550	220
200	590	340	270	254	550	220

Model GS40W LUG DSB

BUTTERFLY VALVES

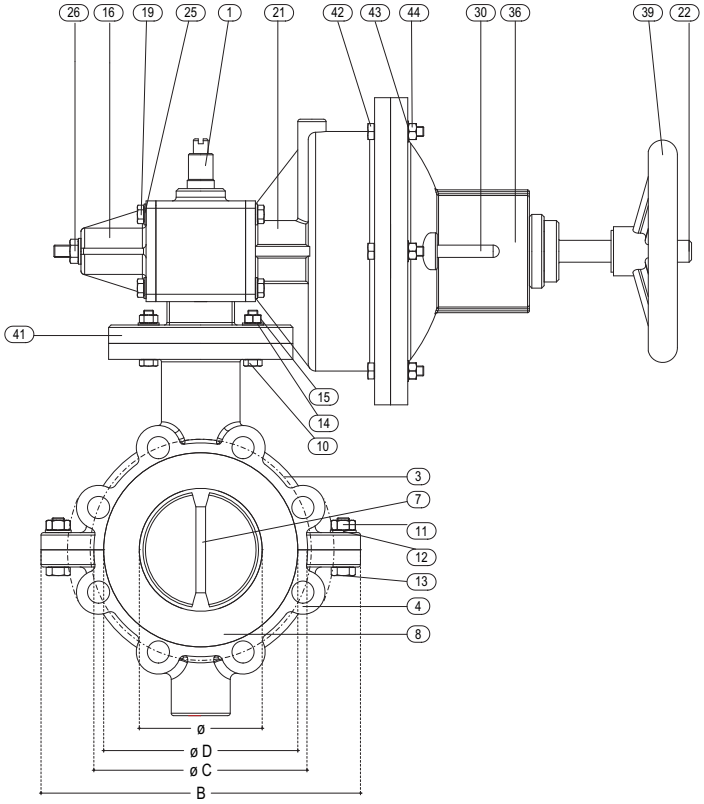

DETAILS

1	DRIVE PIN
2	CAMPLING SCREW FOR BUSHING
3	VALVE UPPER BODY
4	VALVE LOWER BODY
5	BUSHING
6	BUSHING
7	BUTTERFLY
8	RUBBER SLEEVE
9	KEY
10	BOLT
11	HEXAGON NUT
12	WASHER
13	BOLT
14	WASHER
15	HEXAGON NUT
16	COVER
17	SUPPORT CYLINDER
18	GASKET OR
19	BOLT
20	RACK
21	CYLINDER
22	PISTON
23	GASKET PISTON
24	BUSHING
25	WASHER
26	HEXAGON NUT
27	ADJUSTEMENT SCREWS
28	GEAR
29	“V”GASKET
30	GUIDE PIN
31	SOKET
32	BUSHING
33	BUSHING OR
34	SPRINGS
35	GASKET OR
36	COVER
37	BUSHING
38	REGOLATOR BUSHING
39	WHEEL
40	BUSHING
41	FLANGE
42	BOLT
43	WASHER
44	HEXAGON NUT

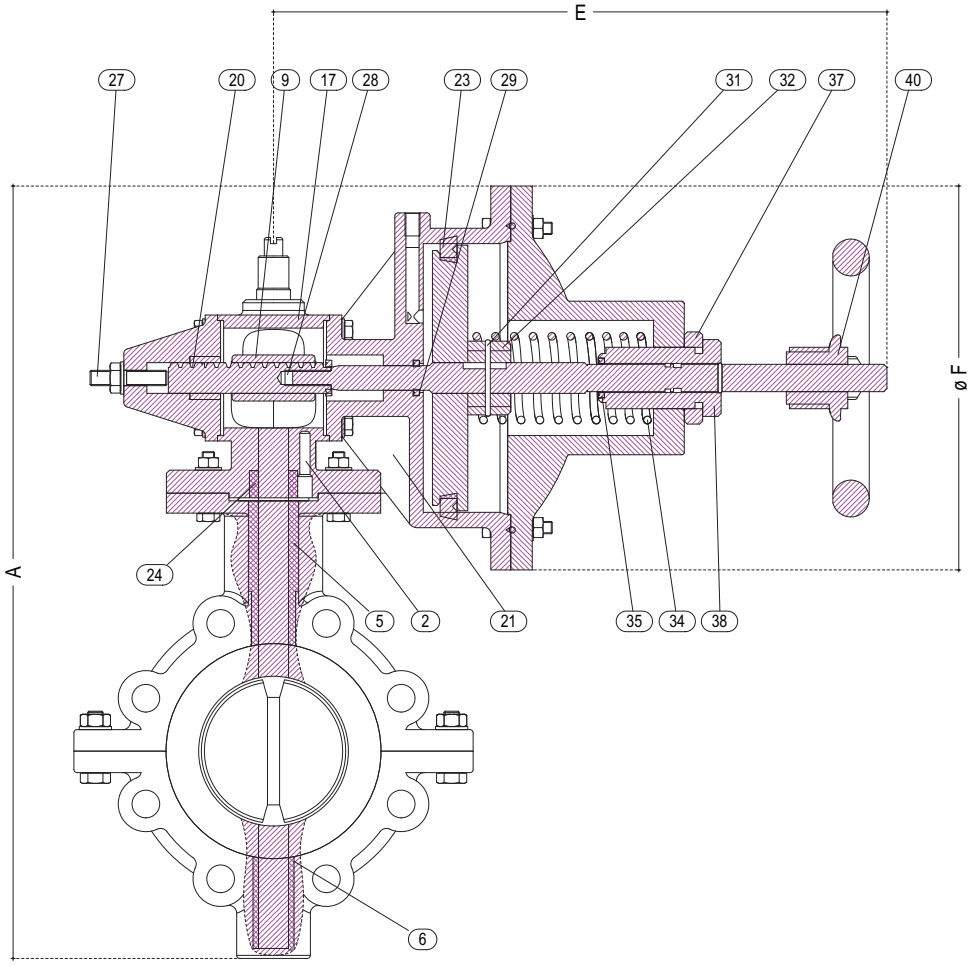

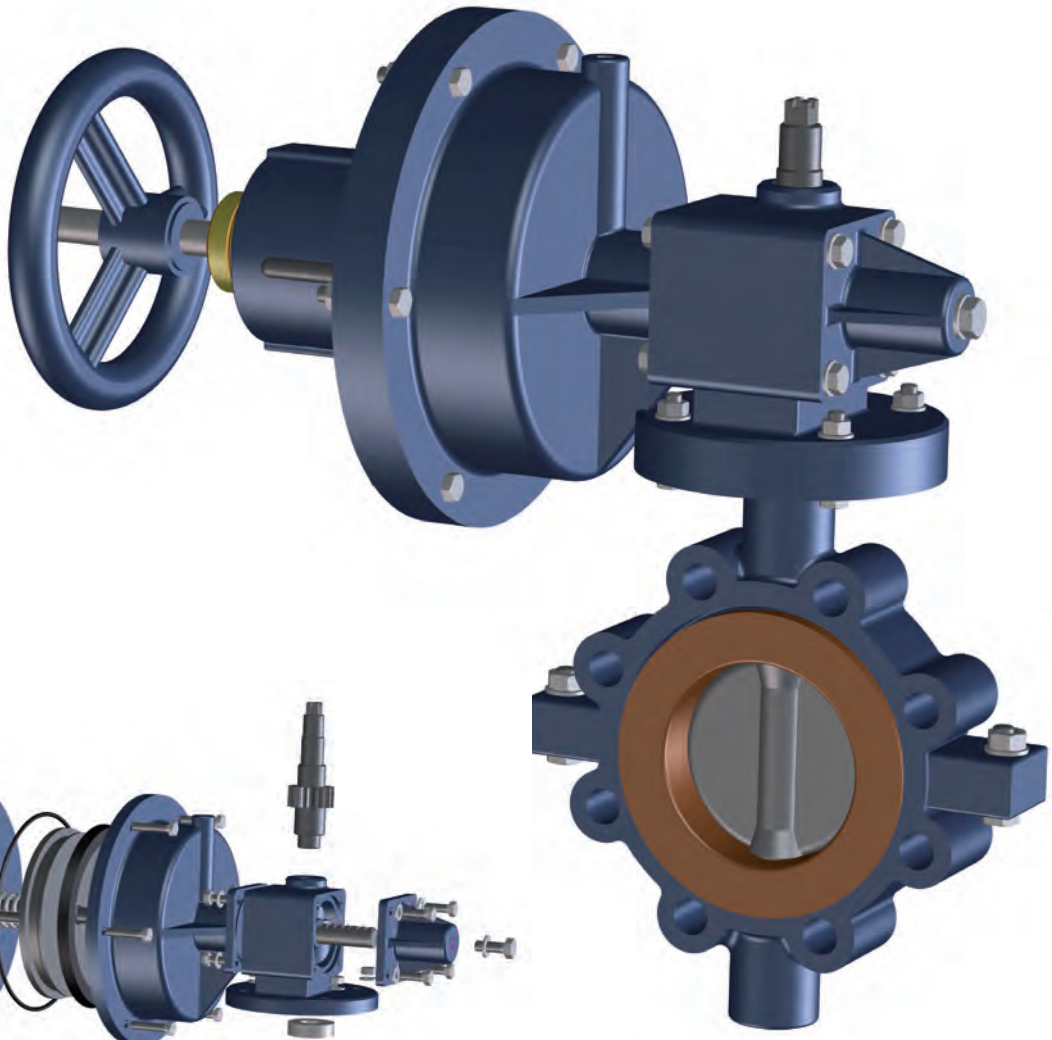

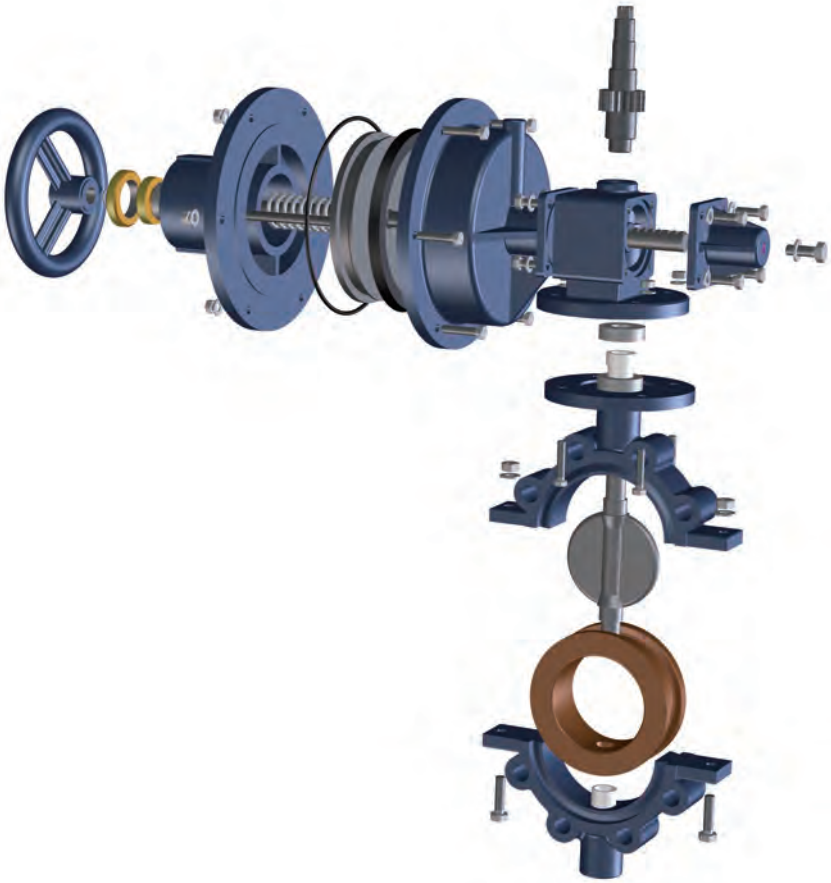

AIR PRESSURE REQUIRED KG/CM²

dn	50	65	80	100	125	150	200
min.	4	4	4	4	4	4	4
max.	6	6	6	6	6	6	6

PRESSURE DETAILS UNI_1284

DN	P.N.	HYDRAULIC TEST kg/cm²		WORKING PRESSURE kg/cm²
		OPEN	CLOSE	
50	7	10	7	6
65	7	10	7	6
80	7	10	7	6
100	7	10	7	6
125	7	10	7	6
150	7	10	7	6
200	6	10	6	5

NOTE: For different pressure details please ask the DPT

WEIGHT KG

C.I.
8,000
11,000
13,000
32,000
37,000
43,000
47,000

DIMENSIONS

Ø	A	B	C	D	E	F
50	345	148	108	90	380	180
65	365	165	115	108	380	180
80	380	200	134	125	380	180
100	423	220	160	150	400	200
125	463	250	190	173	400	200
150	503	280	220	204	550	220
200	590	340	270	254	550	220

Model GS40AW DSB

BUTTERFLY VALVES

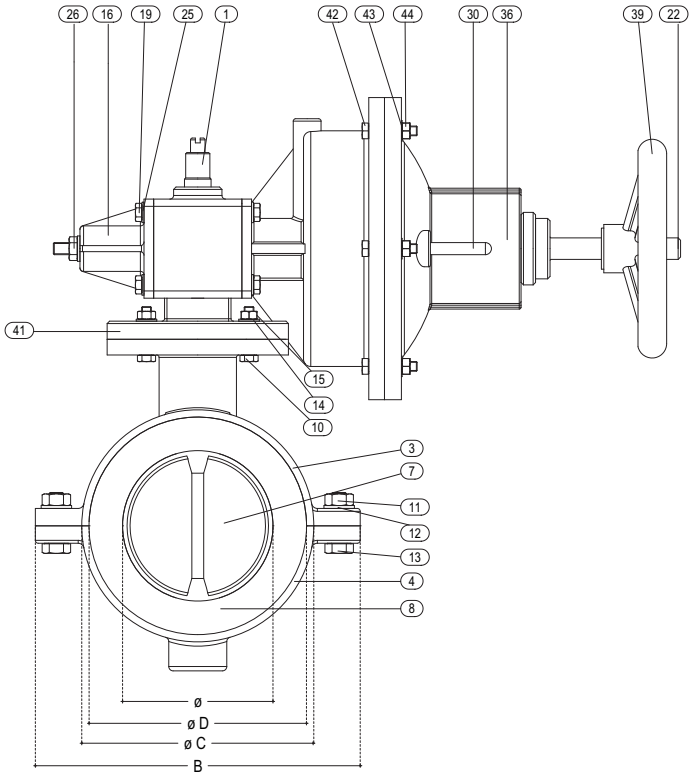

DETAILS	
1	DRIVE PIN
2	CAMPLING SCREW FOR BUSHING
3	VALVE UPPER BODY
4	VALVE LOWER BODY
5	BUSHING
6	BUSHING
7	BUTTERFLY
8	RUBBER SLEEVE
9	KEY
10	BOLT
11	HEXAGON NUT
12	WASHER
13	BOLT
14	WASHER
15	HEXAGON NUT
16	COVER
17	SUPPORT CYLINDER
18	GASKET OR
19	BOLT
20	RACK
21	CYLINDER
22	PISTON
23	GASKET PISTON
24	BUSHING
25	WASHER
26	HEXAGON NUT
27	ADJUSTEMENT SCREWS
28	GEAR
29	"V"GASKET
30	GUIDE PIN
31	SOKET
32	BUSHING
33	BUSHING OR
34	SPRINGS
35	GASKET OR
36	COVER
37	BUSHING
38	REGOLATOR BUSHING
39	WHEEL
40	BUSHING
41	FLANGE
42	BOLT
43	WASHER
44	HEXAGON NUT

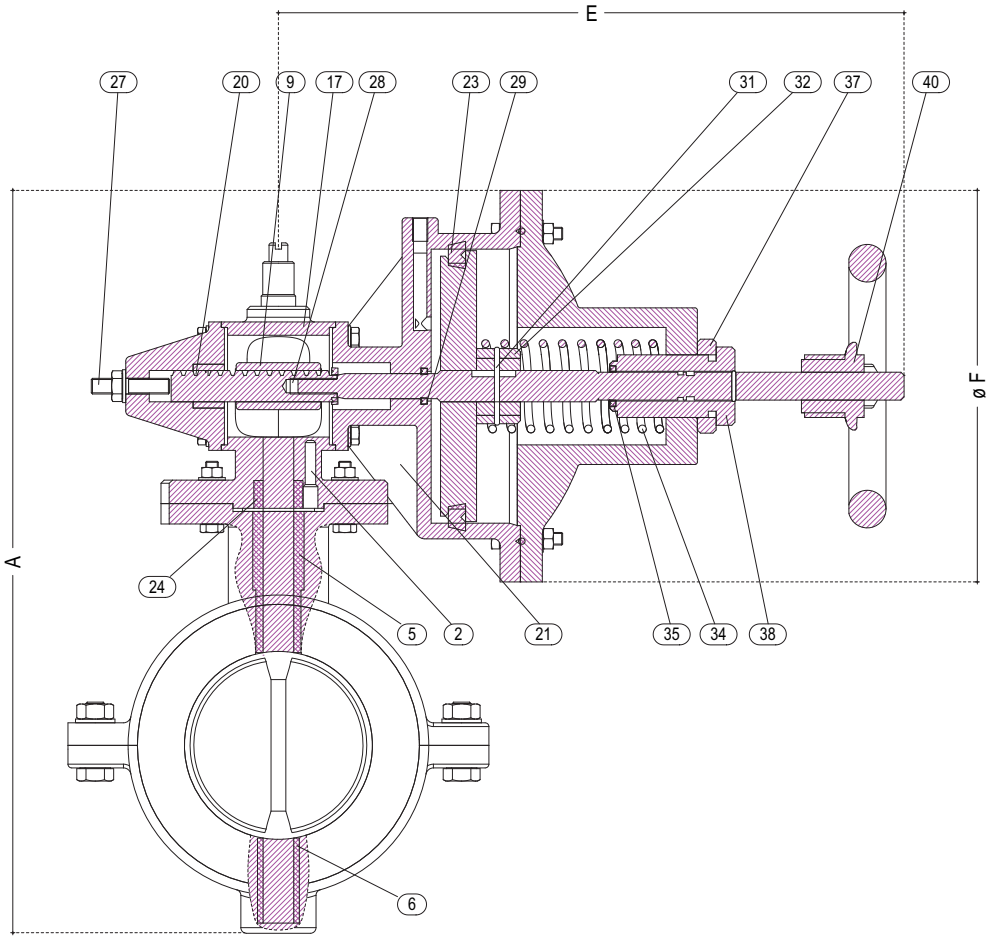

AIR PRESSURE REQUIRED KG/CM²							
dn	50	65	80	100	125	150	200
min.	4	4	4	4	4	4	4
max.	6	6	6	6	6	6	6

PRESSURE DETAILS UNI_1284				
DN	P.N.	HYDRAULIC TEST kg/cm²		WORKING PRESSURE kg/cm²
		OPEN	CLOSE	
50	7	10	7	6
65	7	10	7	6
80	7	10	7	6
100	7	10	7	6
125	7	10	7	6
150	7	10	7	6
200	6	10	6	5

NOTE: For different pressure details please ask the DPT

WEIGHT KG C.I.
8,000
11,000
13,000
32,000
37,000
43,000
47,000

DIMENSIONS						
Ø	A	B	C	D	E	F
50	345	148	108	90	380	180
65	365	165	115	108	380	180
80	380	200	134	125	380	180
100	423	220	160	150	400	200
125	463	250	190	173	400	200
150	503	280	220	204	550	220
200	590	340	270	254	550	220

Model GS40AW LUG DSB

BUTTERFLY VALVES

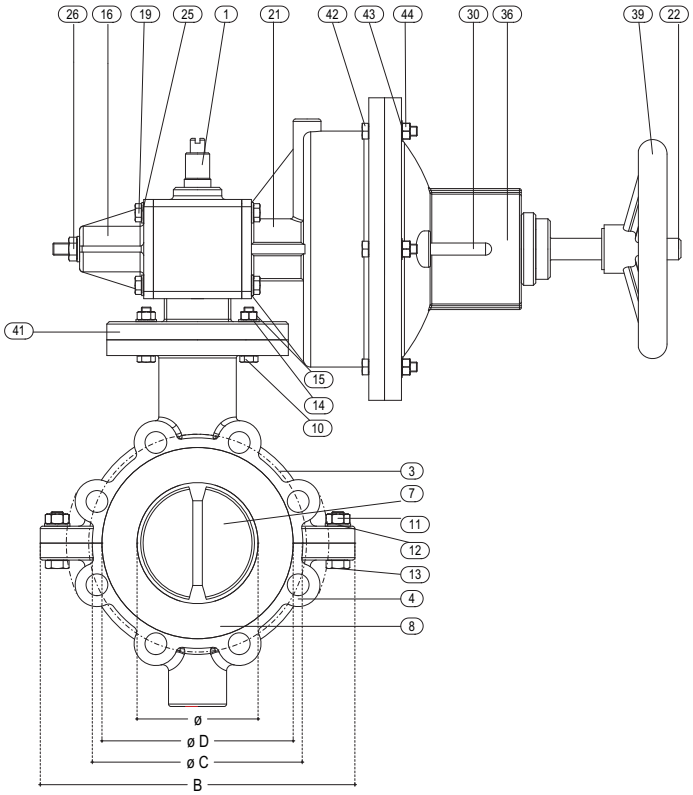

DETAILS	
1	DRIVE PIN
2	CAMPLING SCREW FOR BUSHING
3	VALVE UPPER BODY
4	VALVE LOWER BODY
5	BUSHING
6	BUSHING
7	BUTTERFLY
8	RUBBER SLEEVE
9	KEY
10	BOLT
11	HEXAGON NUT
12	WASHER
13	BOLT
14	WASHER
15	HEXAGON NUT
16	COVER
17	SUPPORT CYLINDER
18	GASKET OR
19	BOLT
20	RACK
21	CYLINDER
22	PISTON
23	GASKET PISTON
24	BUSHING
25	WASHER
26	HEXAGON NUT
27	ADJUSTEMENT SCREWS
28	GEAR
29	"V"GASKET
30	GUIDE PIN
31	SOKET
32	BUSHING
33	BUSHING OR
34	SPRINGS
35	GASKET OR
36	COVER
37	BUSHING
38	REGOLATOR BUSHING
39	WHEEL
40	BUSHING
41	FLANGE
42	BOLT
43	WASHER
44	HEXAGON NUT

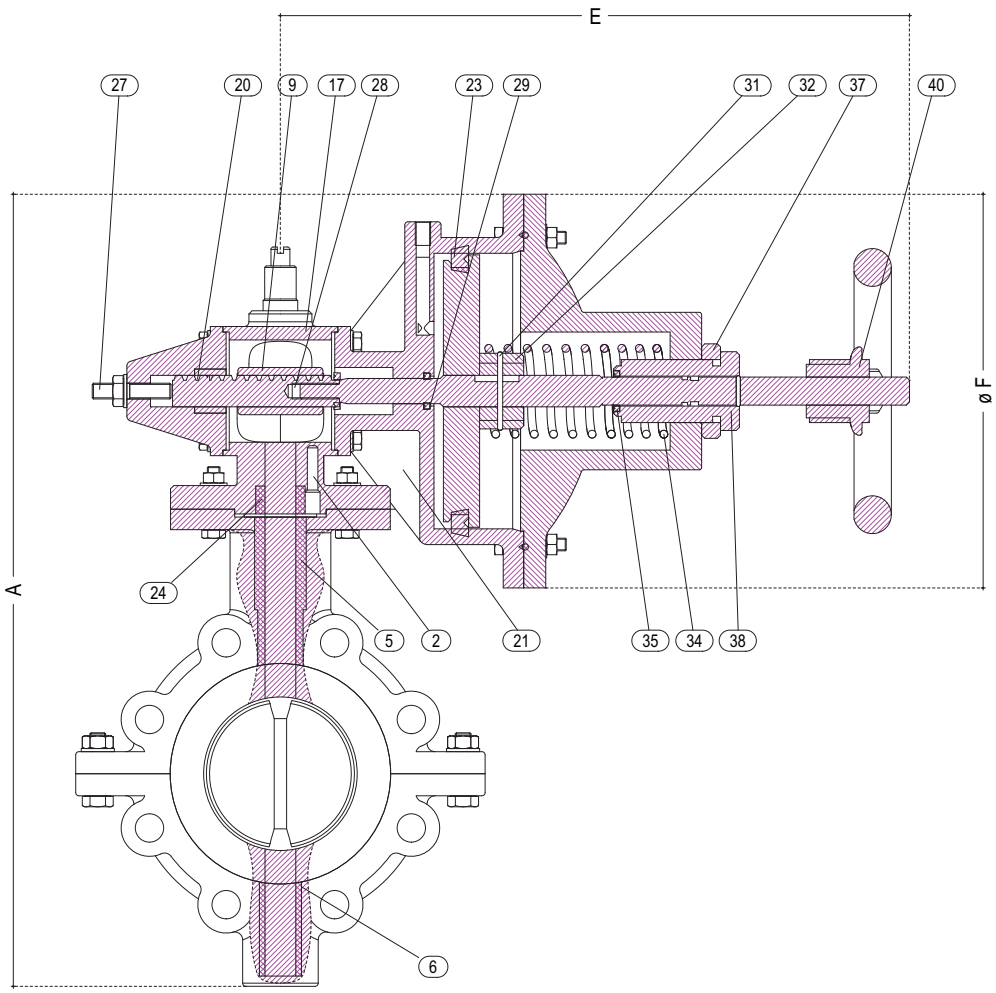

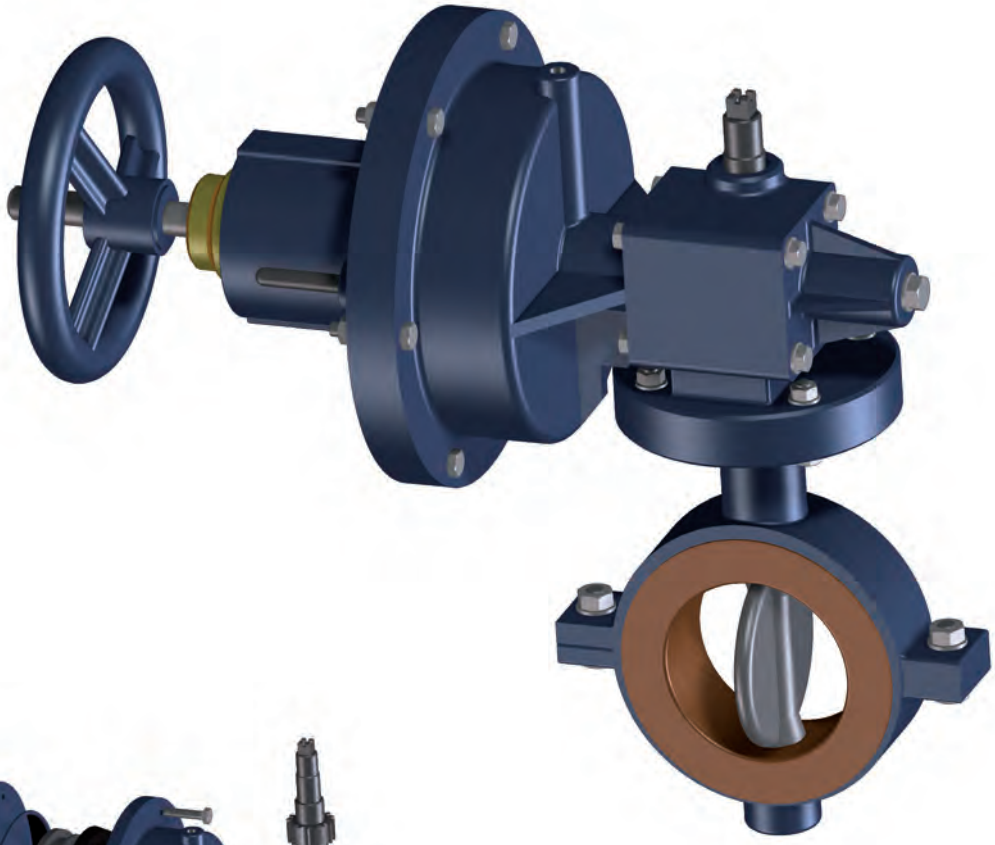

AIR PRESSURE REQUIRED KG/CM²							
dn	50	65	80	100	125	150	200
min.	4	4	4	4	4	4	4
max.	6	6	6	6	6	6	6

PRESSURE DETAILS UNI_1284				
DN	P.N.	HYDRAULIC TEST kg/cm²		WORKING PRESSURE kg/cm²
		OPEN	CLOSE	
50	7	10	7	6
65	7	10	7	6
80	7	10	7	6
100	7	10	7	6
125	7	10	7	6
150	7	10	7	6
200	6	10	6	5

NOTE: For different pressure details please ask the DPT

WEIGHT KG C.I.
8,000
11,000
13,000
32,000
37,000
43,000
47,000

DIMENSIONS						
Ø	A	B	C	D	E	F
50	345	148	108	90	380	180
65	365	165	115	108	380	180
80	380	200	134	125	380	180
100	423	220	160	150	400	200
125	463	250	190	173	400	200
150	503	280	220	204	550	220
200	590	340	270	254	550	220

Model GS30HP

HIGH PERFORMANCE BUTTERFLY VALVES

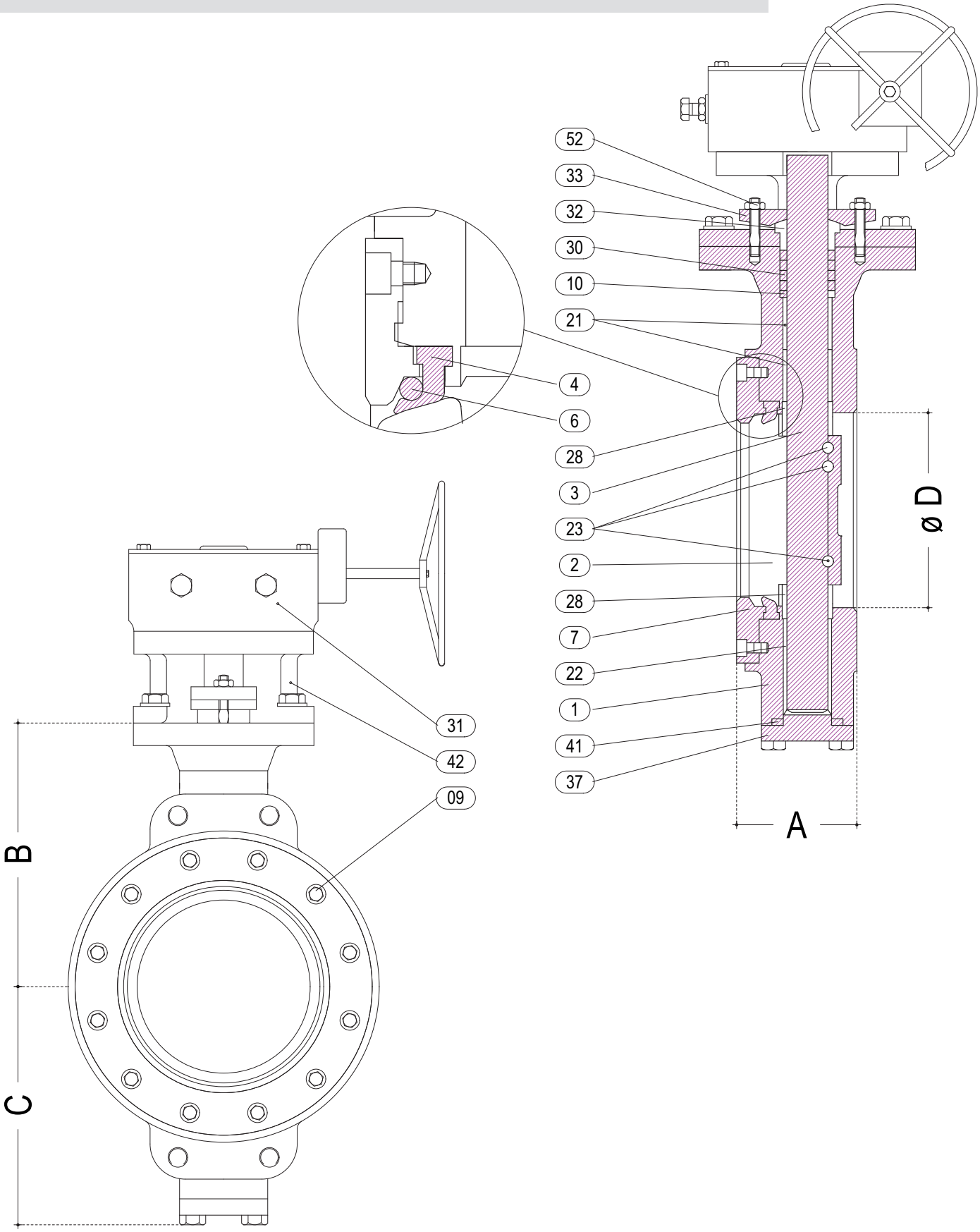

DETAILS

1	BODY
2	DISC
3	STEM
4	SEAT
6	SEAT BACKUP RING
7	SEAT RETAINER
9	SOCH.HD.CTSK.SCREW
10	SPACER
21	TOP STEM BEARING
22	BOTTOM STEM BEARING
23	TAPPER PIN NUT.WASHER
28	THRUST BEARING
30	PACKING
31	GEAR UNIT
32	GLAND
33	GLAND FLANGE
37	BOTTOM COVER
41	GASKET
42	YOKE
52	GLAND STUD.HEX NUT

TEST PRESSURE IN BAR

CLASS	150	300
HYD SHELL	30	76
SEAT	22	55
AIR SEAT	6,9	6,9

WEIGHT KG CLASS 150

WAFER	LUGGED
5,50	7,50
6,00	8,00
8,00	10,00
11,00	14,00
12,00	14,00
16,00	20,00
36,00	45,00
55,00	62,00
70,00	84,00
95,00	122,00
140,00	204,00
180,00	360,00
230,00	456,00
350,00	552,00

WEIGHT KG CLASS 300

LUGGED
9,00
11,00
13,00
18,00
24,00
40,00
60,00
95,00
130,00
180,00
315,00
390,00
550,00
725,00

DIMENSIONS CLASS 150

DN	A	B	C	Ø D
50	43	164	93	62
65	46	181	99	75
80	48	208	120	92
100	54	234	135	114
125	57	238	142	134
150	57	254	175	158
200	64	305	185	214
250	71	340	225	260
300	81	380	265	314
350	92	415	300	354
400	102	445	325	399
450	115	505	355	454
500	128	545	380	494
600	154	640	450	584

DIMENSIONS CLASS 300

DN	A	B	C	Ø D
50	43	164	93	62
65	46	181	99	75
80	48	208	120	92
100	54	234	135	114
125	57	274	142	134
150	59	290	175	158
200	73	335	210	214
250	83	370	240	264
300	92	445	285	314
350	117	480	315	354
400	133	510	355	399
450	149	550	385	454
500	159	610	420	494
600	181	690	490	584

Model GS32W

BUTTERFLY VALVES

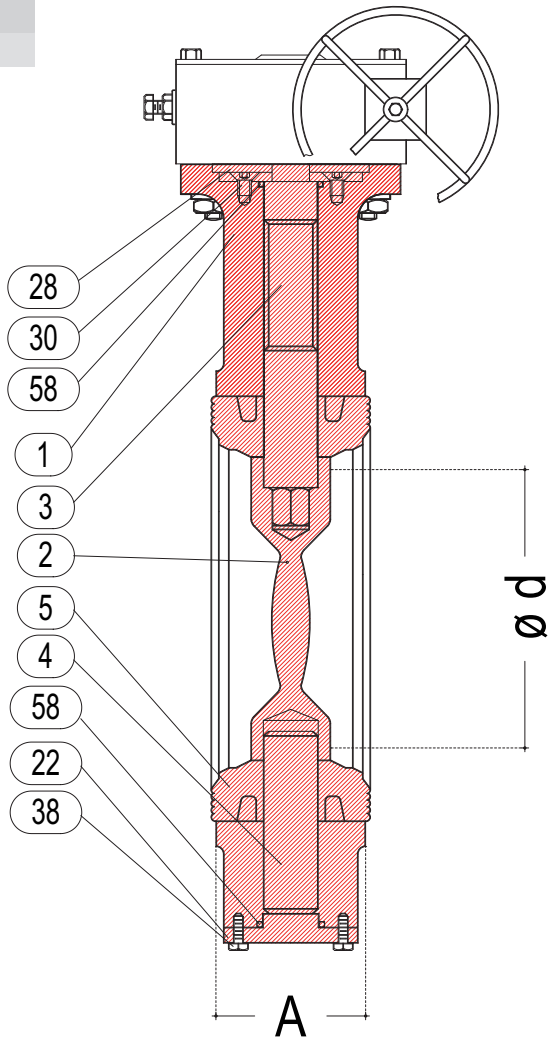

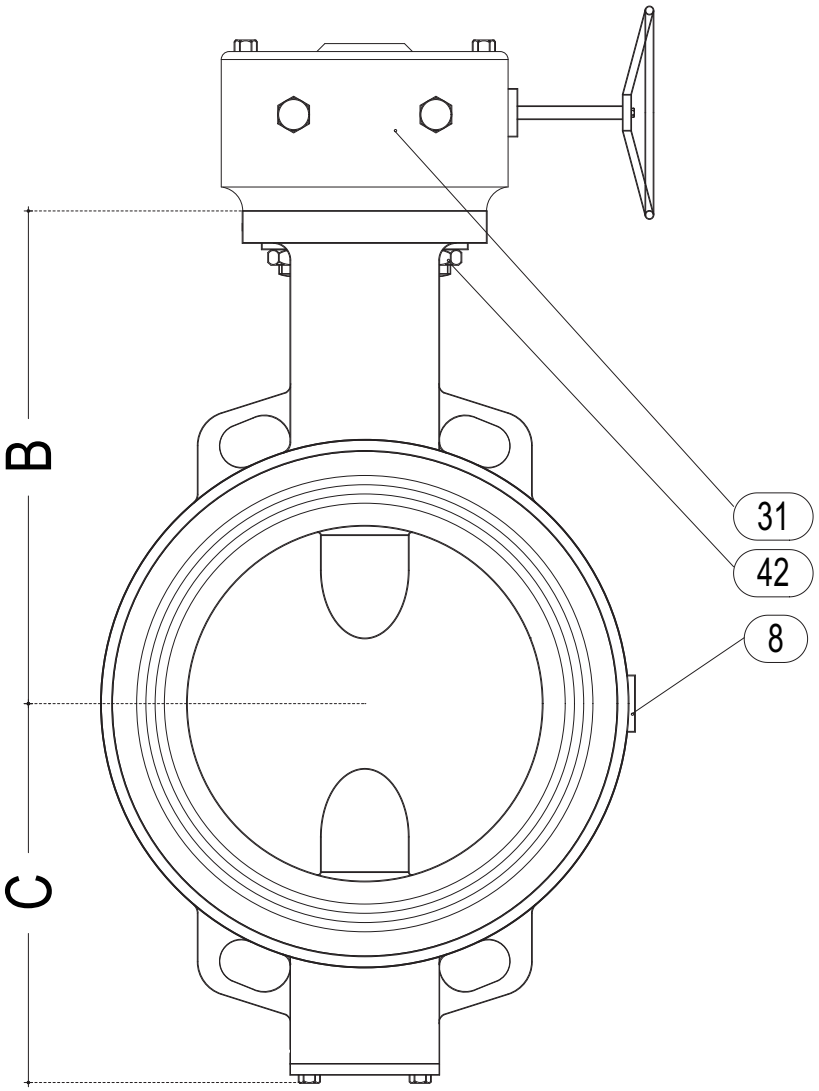

DETAILS	
1	BODY
2	DISC
3	STEM-UPPER
4	STEM-LOWER
5	SEAT
8	NAME PLATE
22	BOTTOM CAP
28	RETAINER PLATE
30	SOCH.HD.CTSK.SCREW
31	GEAR BOX
38	HEX.SCREW
42	HEX.SCREW/SPR.WSHR
58	O-RING

TEST PRESSURE IN BAR

PRESSURE RATING	PN16
HYD SHELL	24
SEAT	17,6
AIR SEAT	6,9

WEIGHT KG

WAFER	LUGGED
4,00	5,50
4,50	6,50
5,00	8,50
5,50	9,00
7,00	13,00
8,00	17,00
9,00	19,00
28,00	43,00
34,00	56,00
51,00	92,00

DIMENSIONS

DN	A	B	C	Ø d
32/40	33	95	65	13
50	43	115	75	33,5
65	46	117	85	47
80	46	135	90	66
100	52	153	118	91,5
125	56	172	135	118
150	56	185	148	146
200	60	221	175	199
250	68	250	210	247
300	78	277	250	297

Model GS32W

BUTTERFLY VALVES

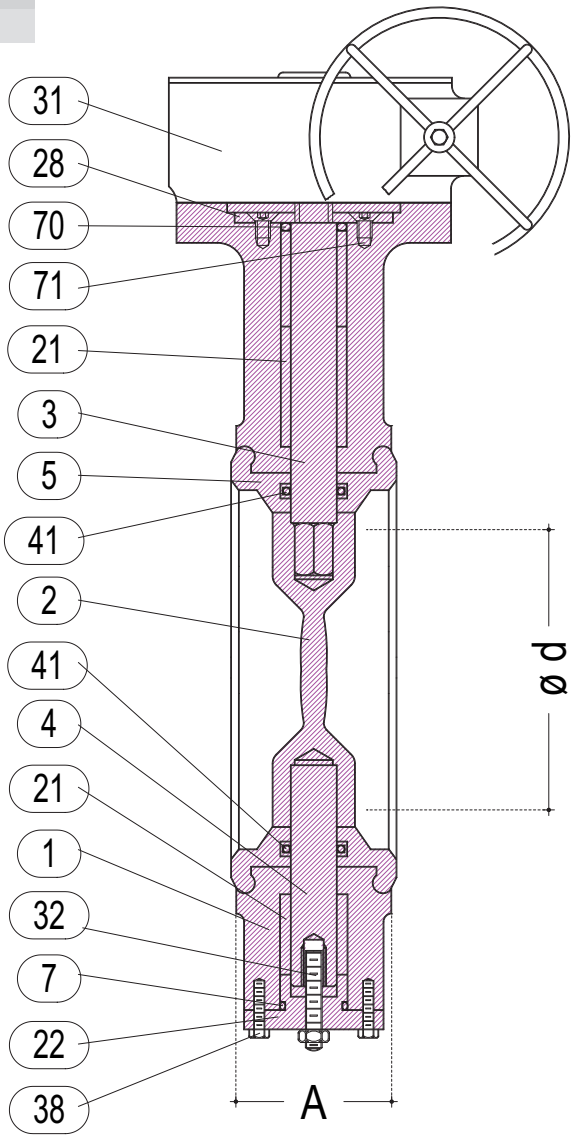

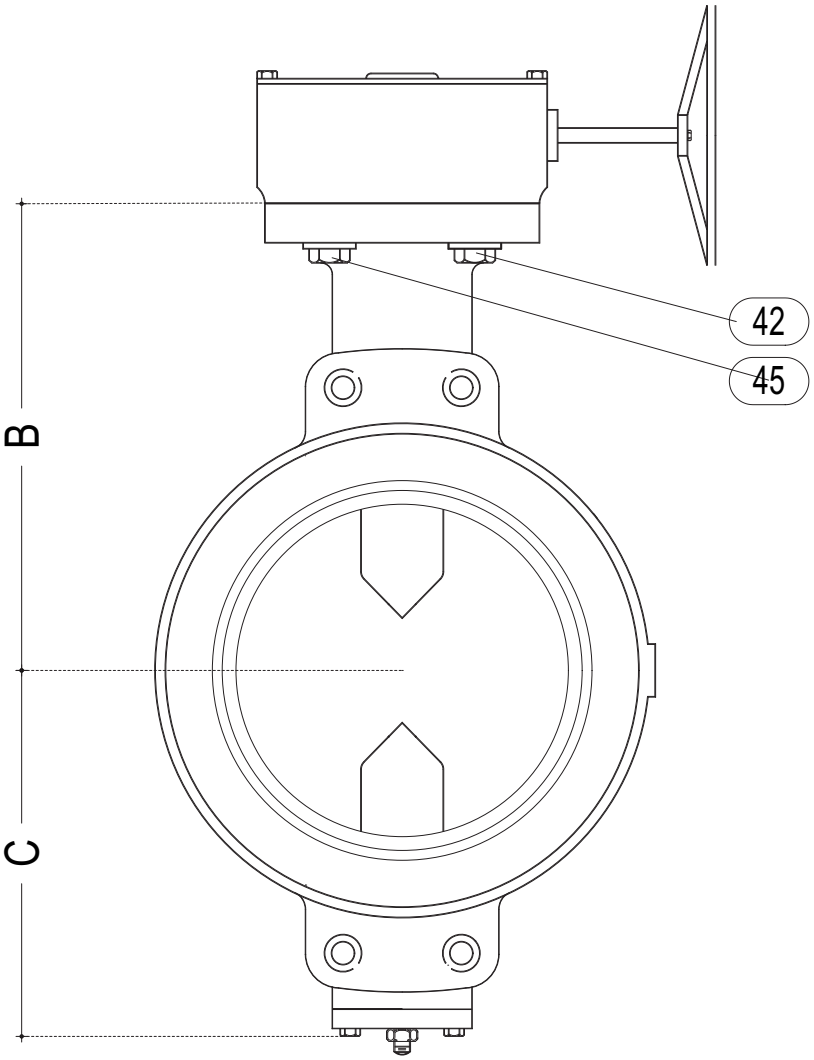

DETAILS	
1	BODY
2	DISC
3	STEM-UPPER
4	STEM-LOWER
5	SEAT
7	O-RING
21	STEAM BEARING
22	BOTTOM CAP
28	RETAINER PLATE
31	GEAR UNIT
32	TRUNION SCREW/NUT
38	HEX SCREW
41	O-RING
42	HEX SCREW,SPRING WSR
45	STUD NUT,SPRING WSR
70	WEATHER SEAL
71	HEX. SCOKET CSK SCREW

TEST PRESSURE IN BAR	
PRESSURE RATING	PN16
HYD SHELL	15
SEAT	11
AIR SEAT	6,9

WEIGHT KG	
WAFER	LUGGED
65,00	100,00
86,00	140,00
110,00	190,00
140,00	230,00
220,00	310,00

DIMENSIONS				
DN	A	B	C	Ø d
350	92	320	297	325
400	102	360	327	370
450	114	390	355	420
500	127	420	385	465
600	154	490	475	560

REGONELI MONZA 06/13

Galassi & Ortolani Spa has been making special valves since 1937.
The range of products, comprising:
- diaphragm valves
- pinch valves
- butterfly valves
- check valves
- pneumatic actuators
- ball valves
- gate valves
- thermoplastic valves

is divided into several versions and variants and is used, in particular, in the chemical industry, in water processing and distribution.
The experience achieved during over 75 years in the making of valves for various-nature fluid-management plants has allowed Galassi & Ortolani to make a name in the plant-construction market as a reference producer both at domestic and international level.

ARTISANS OF YEAR 2000
- Uni En ISO 9001 Quality Management System Certified
- Choice of ISO certified suppliers who utilize the latest casting technologies
- Check of all incoming components so as to find and eliminate those defective
- Check of all machined products for conformance to our dimensional standards
- Hydraulic test of body valve at 110/115% of rated pressure to ensure the best tightness
- Each valve being coated with an anti-corrosive varnish at no additional cost

CNC PROCESS
Equipment for Machining Centres and CN Lathes
- To have the utmost control possible on each component
- To allow total interchangeability of each component in case it is changed
- To ensure valve perfect stability and connection
- To reduce Torque rating

CUSTOMER HELP
- Customer's personalized treatment, both pre-sales and after-sales
- Direct intervention by our experts on Plants upon request
- Extensive store of spare parts for immediate availability

CISQ

IQNet
THE INTERNATIONAL CERTIFICATION NETWORK

SINCERT
ACCREDITAMENTO ORGANISMI DI CERTIFICAZIONE E ISPEZIONE

ISO 9001:2000
Registr. n° IT 44453

GALASSI&ORTOLANI
VALVESMANUFACTURE**DIVISION**

GALASSI & ORTOLANI SpA
Via Ghirlandaio, 2/4 - 20096 Pioltello (MI) Italy
Tel. +39 02.92103459 - 02.92103801 - 02.92103802 - Fax +39 02.92103804
E-mail:info@galassiortolani.com - www.galassiortolani.com